DESIGN AND CONSTRUCTION OF AN AUTOMATIC EMERGENCY RECHARGEABLE LIGHTING SYSTEM

BY

CHIDOZIE OBIKE
2003/15420EE

DEPARTMENT OF ELECTRICAL AND COMPUTER ENGINEERING, FEDERAL UNIVERSITY OF TECHNOLOGY MINNA, NIGER STATE

NOVEMBER, 2008

DESIGN AND CONSTRUCTION OF AN AUTOMATIC EMERGENCY RECHARGEABLE LIGHTING SYSTEM

BY

CHIDOZIE OBIKE
2003/15420EE

A THESIS SUBMITTED TO THE DEPARTMENT OF ELECTRICAL AND COMPUTER ENGINEERING IN PARTIAL FULFILMENT FOR THE AWARD OF BACHELOR OF ENGINEERING (B.ENG), FEDERAL UNIVERSITY OF TECHNOLOGY MINNA, NIGER STATE

NOVEMBER, 2008

Dedication

This project is dedicated to the Almighty God for guiding me throughout my educational pursuit within the academia. I also dedicate it to my Parents; Mr. Monday Obike and Mrs. Regina Obike.

Declaration

I, Obike Chidozie, with the matriculation number 2003/15420EE, declare that this work was done by me and has never been presented elsewhere for the award of a degree. I also hereby relinquish the copy right to the Federal University of Technology, Minna.

(Name of student)



(Signature and date)

(Name of supervisor)

(Signature and date)

(Name of H.O.D)

(Signature and date)

(Name of external examiner)

(Signature and date)

Acknowledgement

I am most grateful to God; for the Inestimable favour dispensed on me in my erudition.

My ever amiable Supervisor Mr. David Michael has propagated hard work and instigated ingenuity in me, I am indeed grateful. I am appreciative to Dr Y. Adediran, (H.O.D Electrical and Computer Engineering), the persistent lecturers of this great department and the laboratory technicians.

I am also indebted to my online friend Ajah Victor.

I wish I could ink the following names in gold for the kindred affection and Prayers showered on me; Arc. U.M Ekwueme, Mr. Christopher Chijioke, Master Christopher Ode and Miss Chidinma Joyce Obike

Abstract

The Design and Construction of an Automatic Emergency Rechargeable Lighting System will basically wipe away the possibility of instant black-out whenever there is an unexpected power failure from the mains (PHCN or Generator). The strategic focus of this idea, is to make a portable and reliable device that consist of a voltage sensing circuit which is capable of charging a 6.3V battery and switching automatically to an alternative power source by the use of a relay and royal inverter.

The operational mode of the device is a basic concept of current state conversion i.e. AC to DC conversion and DC to AC conversion, the device is made portable and can easily be used, operated, maintained and purchased by consumers' at affordable price. It can be mounted at vital positions in places like Bank Vaults, Operation Theaters, Laboratories, Offices, Schools, Homes and Streets etc.

Table of Contents

Dedication II

Declaration III

Acknowledgment IV

Abstract V

Table of Contents ..... VI - VII

Chapter One: Introduction 1

1.1 Mode at which emergency lighting system works ..... 1 - 2

2.1 Aims and Objectives 2

1.3 Methodology 3

1.4 Scope of the project 3

1.5 Project Layout 4

Chapter Two: Literature Review 5

2.1 Stand - By Power Source 6

2.2 Royer Dc – Ac Converter ..... 6 - 7

Block Diagram of an Automatic Emergency Rechargeable Lighting System 8

Chapter Three: Design and Implementation 9

3.1 The Power supply unit 9

3.2 The local AC mains supply ..... 9 - 10

3.2.1 The Stepping – Down ..... 10 - 11

3.2.2 Rectification 12

3.2.3 Testing with Input AC Signal ..... 13 - 14

3.2.4 Filtering ..... 14 - 15

3.3 The Change – Over Switch 16

3.3.1 Relay ..... 16 - 17

3.4 The Battery Charger Unit ..... 17 - 22

3.5 The DC back up power supply 22

3.5.1 The Battery ..... 22 - 23

3.5.2 Low Power Royer Dc – Ac Inverter ..... 23 – 25

Circuit Diagram of an Automatic Emergency Lighting System 26

Chapter Four: Tests, Results and Discussion 27

4.1 Testing 27

4.2 Result ..... 27 - 28

4.3 Discussion of Results 29

Chapter Five: Conclusion and Recommendation 30

5.1 Conclusion 30

5.2 Recommendation 30

References 32

Appendix III ..... 33 - 34

Chapter One

Introduction

An Automatic Emergency Rechargeable Lighting System can be described as an alternative supply of light whenever there is power failure from the main supply. In countries like Nigeria where there is incessant power failure, it is extremely important to have an Emergency lighting system to illuminate the areas or places of source sensitivity and danger when main supply is off. Such premises are Operation theatres, Hospitals, Libraries, Bank vault, Stadiums, Generation stations, Public corridors, Exits etc. it may be used ON –LINE between the commercial power and sensitive load to provide transient free well – regulated power, or OFF – LINE and switched only when commercial power fails. It operates whenever there's mains power failure.

1.1 Mode at which emergency lighting system works

Normal electrical lights are powered by the 240 volt AC consumer mains. At the failure of the mains supply, an emergency supply of light is automatically powered by a back – up battery. The instant or automatic switching is done by an automatic switching device called "Relay". The automatic switching device (relay) disconnects the emergency lighting system from the mains supply without being touched. Below are samples of automatic emergency rechargeable lights.

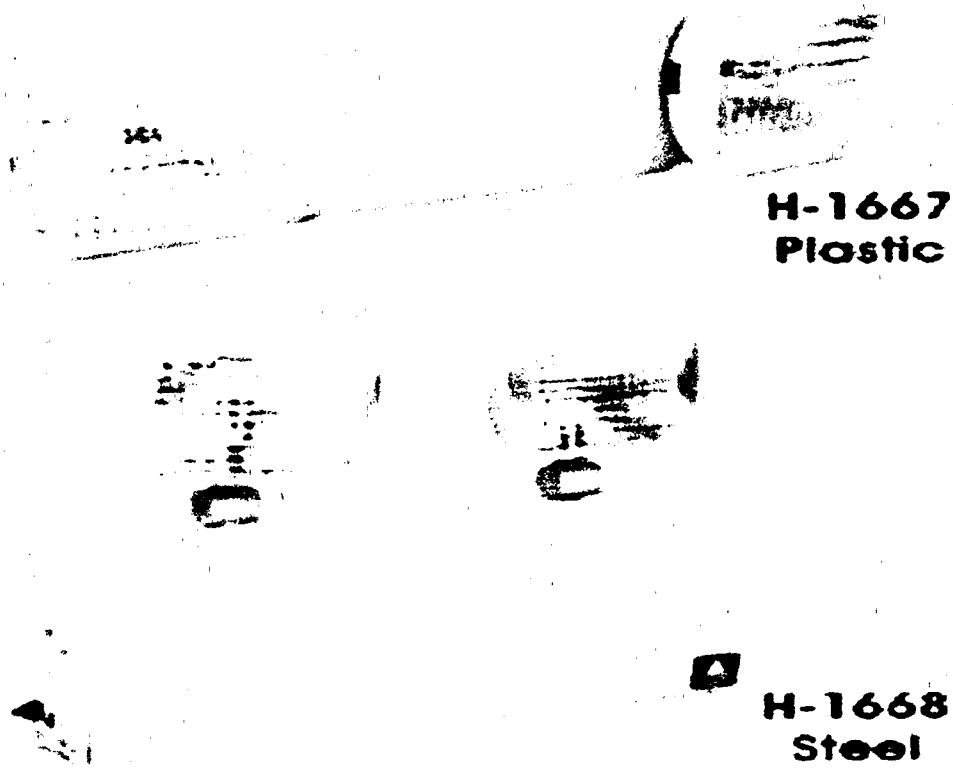

Fig. 1.00 Samples of automatic rechargeable lighting system.

1.2 Aims and Objectives

The aim and objective of this project is to design and construct an emergency lighting system for sensitive places, like Hospital operating theatres, ships, stadium, public corridors exits etc.

Simple and easy method of providing emergency lighting, reduce the amount of energy to provide emergency lighting and increases battery life.

Chapter two contains the literature review of the project and the types of emergency lighting system. Chapter three is the design analyses. Chapter four is the construction, testing and results.

Lastly chapter five forms the conclusion of project. Recommendations are discussed here.

Chapter Two

Literature Review

In the history of mankind, lighting has become the most valuable and most needed energy for creating direct visual sensation. Light energy has evolved from the primitive form to the sophisticated form in the present. Naturally, the lighting system consists of moonlight, sun and fire from the first place, sun is the heavenly body producing light energy to the earth. The moon reflects light from the sun and illuminates the Earth. Fire which is another form of light energy was produced by burning wood, paper, oil, coal and candles. The early man first produced light by striking two stones together.

In the other hand, the advent of electricity seemed to be the end of the quest for the source of light energy. It is efficient, portable and reliable. This artificial method of producing light energy involves raising the temperature of a solid, liquid or gas to flame by applying heat to it.

More so, as the source of the light energy (i.e. electricity) is becoming less reliable most especially in less developed countries, then the quest for producing alternative illumination to some sensitive areas / environment in case of emergency lighting system had also evolved from differed forms till now. Most of those are:

- Stand – by power source
- Solid state system
- Maintained emergency lighting system
- Non maintained system
- Spit fire
- Rotary power source

- Fluorescent light and combined electronic Ballast and emergency module

This are explained below:

2.1 Stand - By Power Source

The stand – by power source is one of the emergency lighting systems that consist of a battery and a DC to AC inverter. The battery is connected to DC to AC inverter. The battery charger is to keep the battery on full charge. The inverter provides AC power for the sensitive load through a switch. Normally, the load operates directly from the mains power line. The sensitive load draws its power from the Ac generator and it is operated through the outage.

The present invention which is the topic of this project makes use of **Royer DC – AC Inverter.** This is a low power high – frequency inverter used for this project work (i.e. automatic emergency lighting system). It also makes use of a stand - by battery power in order to use the same system to provide emergency light at a lower level to conserve battery life in the event of power failure. The purpose of the battery charger is to charge the battery when the mains power is present. The battery provides power to the inverter any time the mains power fails, automatically through the change over circuit.

The low – power, high – frequency Royer inverter changes the DC voltage from the battery bank to an AC voltage to power the load. A high voltage is necessary. The battery charger also features a cut – off of mains supply when the battery is fully charged. The inverter determines the quality of the power used to drive the load. If the inverter fails, the system is out of operation. The emergency lighting system of this project is OFF – LINE which means it switches on only when mains power fails.

Some modification features in this invention are:

- Simple and easy method to provide emergency utilization only for a single gas discharge lighting device.
- The amount of energy used to provide emergency lighting over the required period for normal lighting is reduced.
- The battery life is increased through the modification of cutting out supply automatically when the battery is fully charged and reduced ON time for average emergency operation.
- To provide a system that will operate from either alternating or direct current power.
- Have about 45 minutes of emergency duration.
- Has reduced weight and dimensional, thus making it more portable.
- It also has the modification of discontinuing the device for long non – operational periods.
- And lastly, it provides adequate – illumination.

BLOCK DIAGRAM OF AN AUTOMATIC EMERGENCY RECHARGEABLE LIGHTING SYSTEM

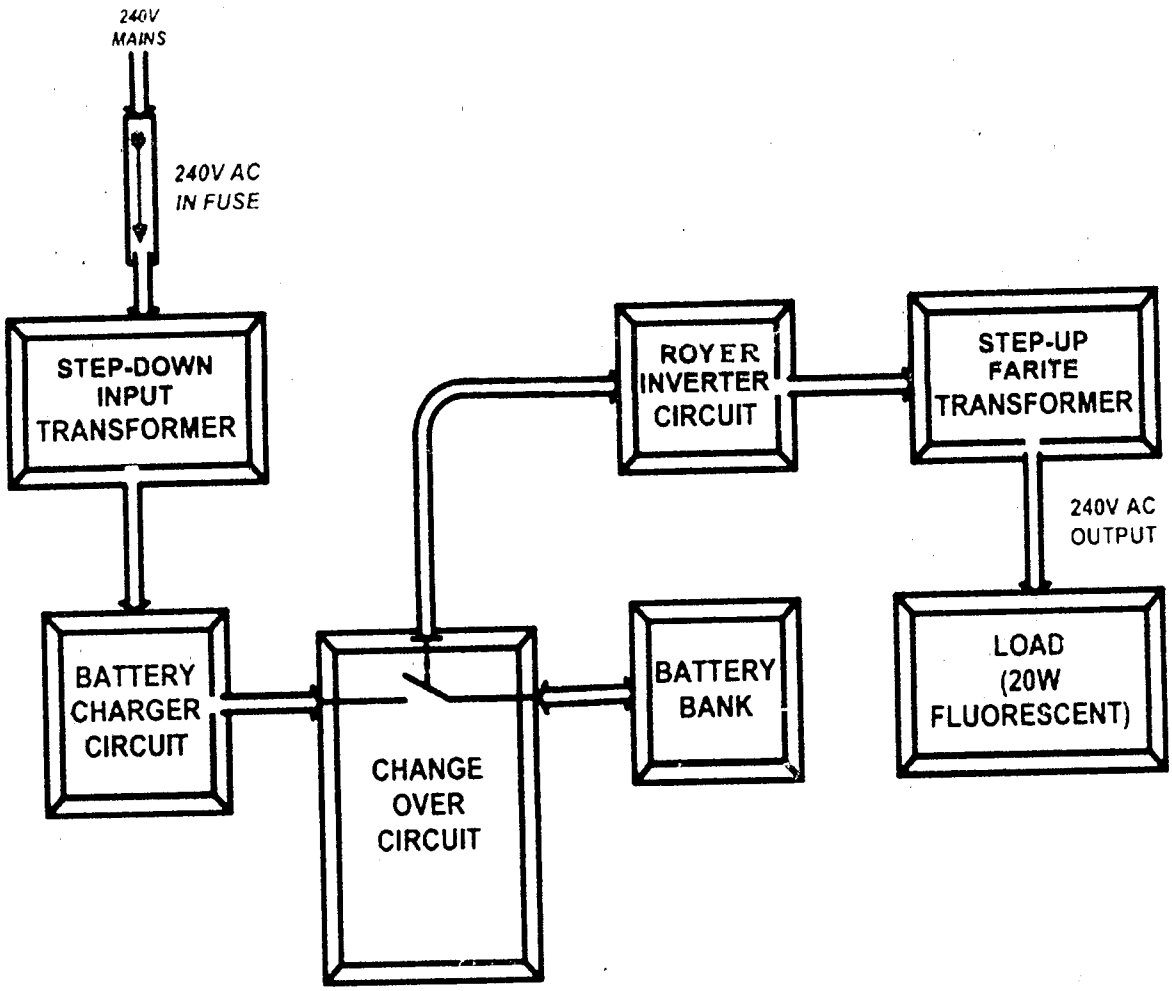

Fig. 2.00 Block Diagram of an Automatic Emergency Rechargeable Lighting System

Chapter Three

Design and implementation

The design and construction of an automatic emergency system is based on four main blocks or units, so this part of the report describes in details at the components level the system make up.

The main sub – units are under listed below:

i. Power supply unit,

ii. Lead – acid battery charger sub system,

iii. The change – over unit, and

iv. Low power high – frequency royer inverter

3.1 The Power Supply Units

All electronic circuit needs / requires energy to work. The power supply unit provides this electrical energy. In this vain, a suitable, regulated power supply that provides this project work with the suitable energy is used and described below.

The power supply comprises of two power sources.

i. The AC mains supply, and

ii. The DC back up power supply.

3.2 The AC Mains Supply

The AC mains were needed to charge the incorporated 6V, 4.5A lead acid secondary cell.

The suitable power supply was achieved through.

i. Stepping – down the AC mains to 12V

ii. Full wave rectification

iii. Filtering and reguiation of the rectified out put

3.2.1 The Stepping – Down

Introducing the transformer concept as a block diagram below, it generally explains the functionality, calculation and application of an ideal transformer.

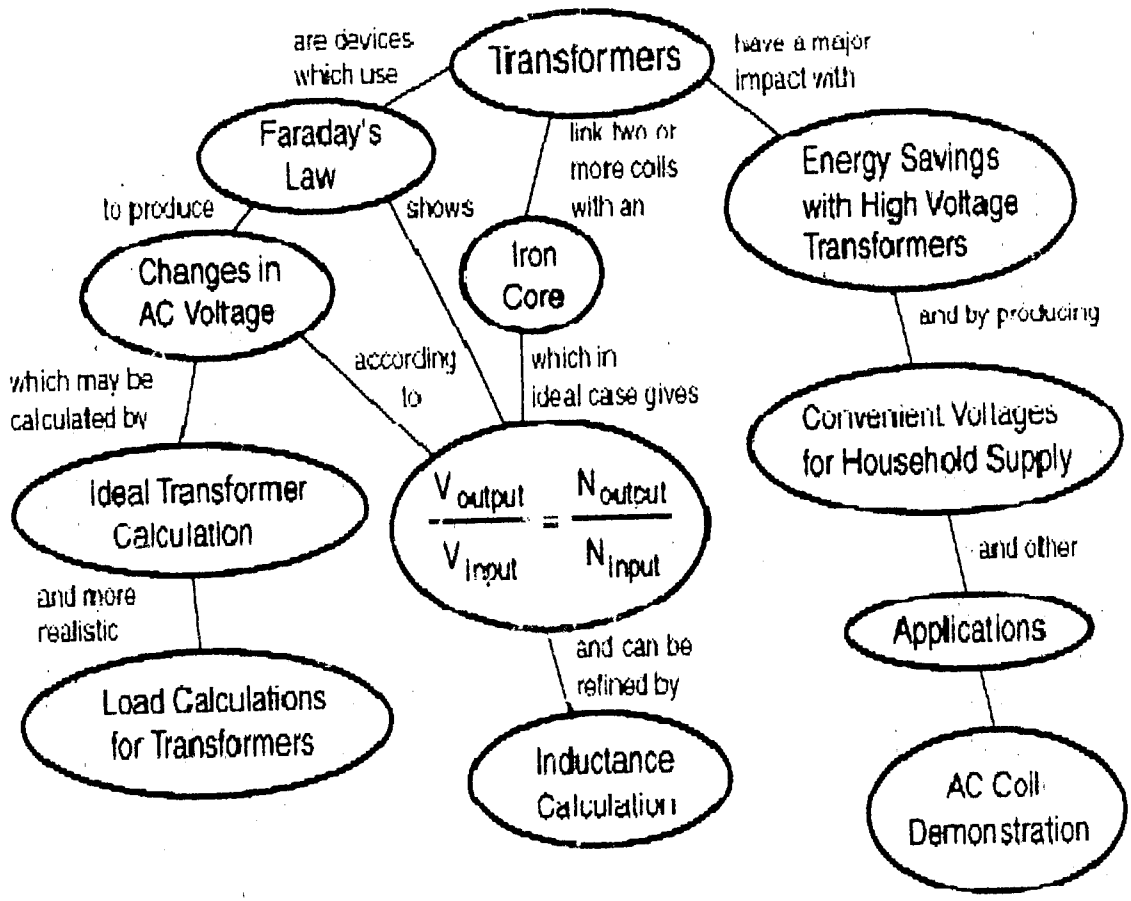

Fig. 3.10 Transformer Concepts

The stepping – down of the local AC supply was achieved by the use of 12V, 0.5A step – down transformer.

Fig3.1 below shows the diagram of an ideal transformer.

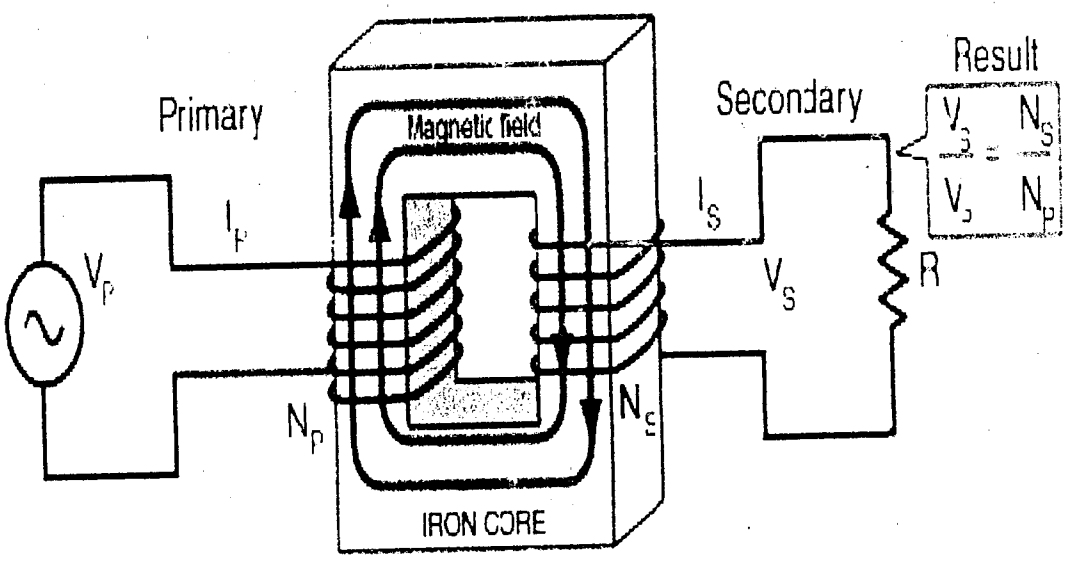

Fig 3.01 Ideal Transformer

Φ is the flux in the core

V_p is the primary voltage

Vs is the secondary voltage

Ep is the primary e.m.f, and

Es is the secondary e.m.f.

Let N1 and N2 represent the number of the turns of the primary coils and the secondary coils respectively.

Then, $\frac{Vp}{Vs} = \frac{N1}{N2}$

Thus $Vs = \frac{Vp \times N2}{N1}$

In this project, a standard 12V transformer was used

3.2.2 Rectification

Rectification is the conversion of alternating current to direct current i.e. DC. In this project work, a full wave bridge system of rectification was adopted. The arrangement is shown in fig 3.2 below. It contains four diodes D1, D2, D3 and D4 connected to form a bridge. During the positive input half – cycle, terminal of the secondary is positive and Q is negative. Diodes D1 and D3 become forward biased (i.e. ON) whereas D2 and D4 are reverse – biased (OFF). During the negative input – half – cycle, secondary terminal Q becomes positive and p negative.

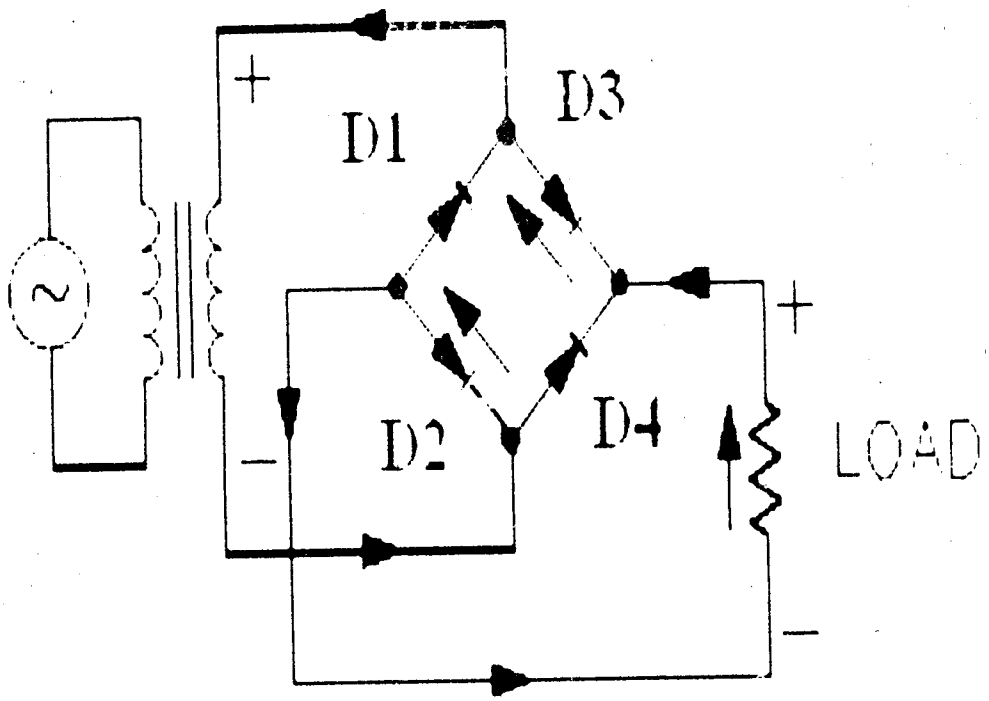

Fig. 3.20 Full Wave Bridge Rectifier Circuit

3.2.3 Testing with Input AC Signal

The testing shows the input signal and 3rd harmonic detector for a clean sine wave.

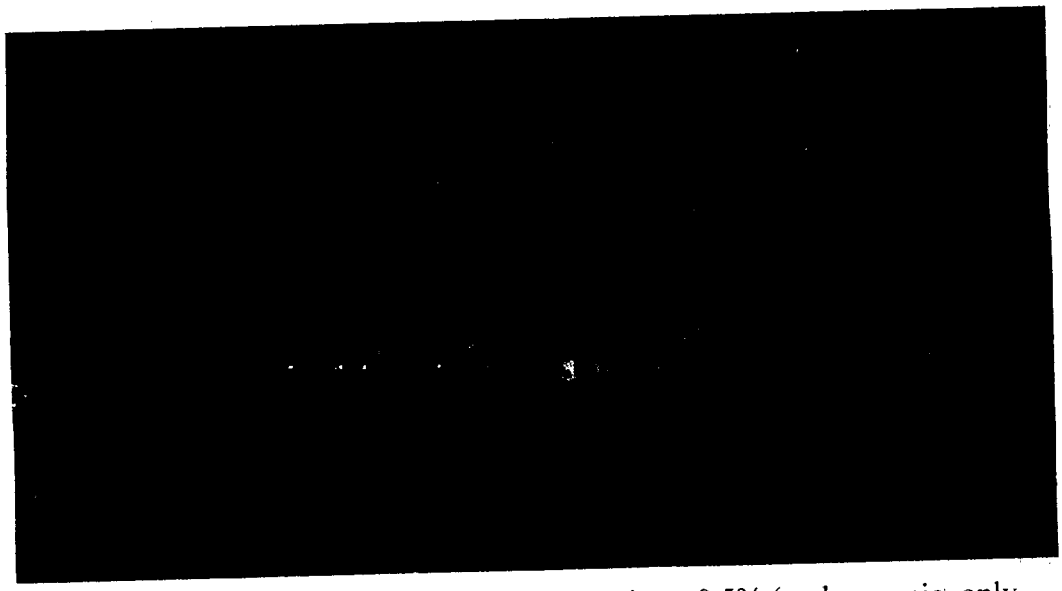

Fig. 3.03 Clean sine wave, 3rd harmonic distortion <0.5% (no harmonic, only fundamental frequency).

The output voltage is a DC output. The waveform is as shown below in fig. 3.4.

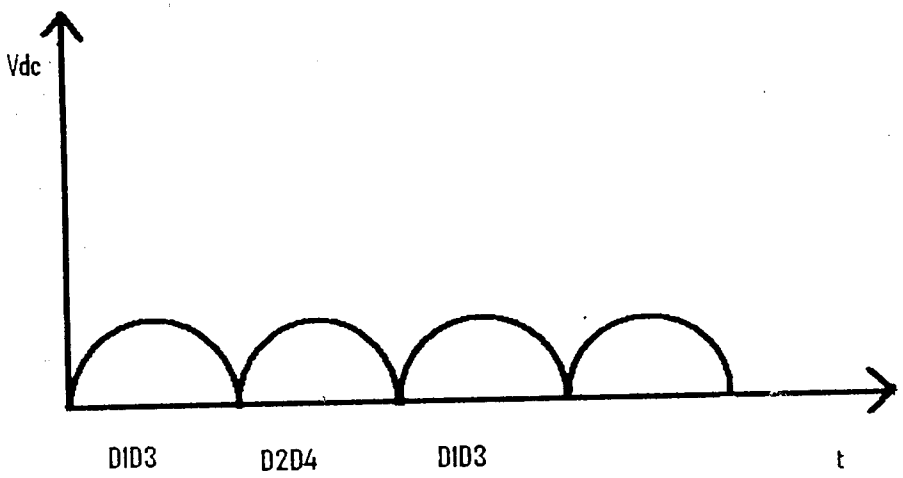

Fig. 3.04 the Rectified Output Waveform

The full wave rectification efficiency can be calculated using

$$n = \frac{0.812\ R1}{rD + R1}$$

Where R1 = load resistance, and

rD = diode resistance.

After full wave rectification, the relation below gives the DC voltage with peak amplitude.

VDC = (Vrms √2-1.4) V [16]

For 12V r.m.s input, the peak DC Voltage is therefore:

VDC = (12 √2-1.4) = 15.6 V

VDC = 16.0 V

3.2.4 Filtering

The output waveform of fig 3.2 comprises of both AC and DC components. The AC component in a DC power supply, which is called a ripple voltage, is removed through filtering or smothering.

In this project work, the DC voltage was smoothened by a 25V 2200uf capacitor and fed into the charger circuit. The complete power supply unit is shown in fig 3.5 below.

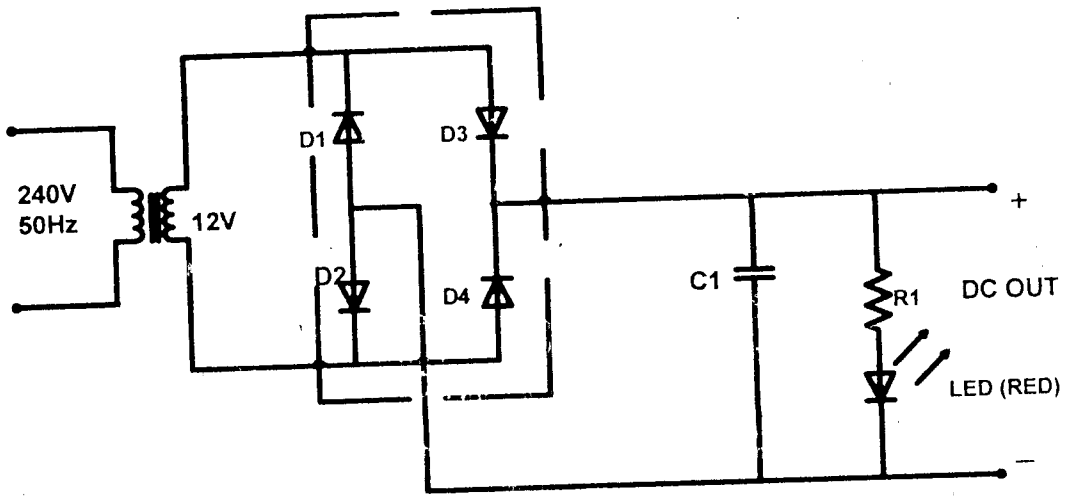

Fig. 3.05 Power Supply Unit

An LED (red), power indicator was provided across the DC output to reflect the presence/absence of the local mains.

A current limiting resistor (R1) was wired in series with the LED, the value of which was evaluated using.

$$R1 = \frac{VDS - VLED}{I\,LED}$$

VDs = 16V, VLED = 1.7V, ILED = 10mA

Thus;

$$R1 = \frac{16 - 1.7}{0.01} = \frac{14.3}{0.01}$$

= 1430 ohms

= 1.43 Kilo-ohms

To account for the voltage variation of typically $\pm$10%, a 3.3 k resistor was used.

The output waveform was been filtered through a smoothened capacitor.

3.3 The Change – Over Switch

3.3.1 Relay

Relay is an electromechanical device or switch to keep electronic circuit electrically isolated from the AC power line. Also used to switch power from one power source to another, in the project work 12V relay was used for switching. Fig3.7 below shows a typical relay.

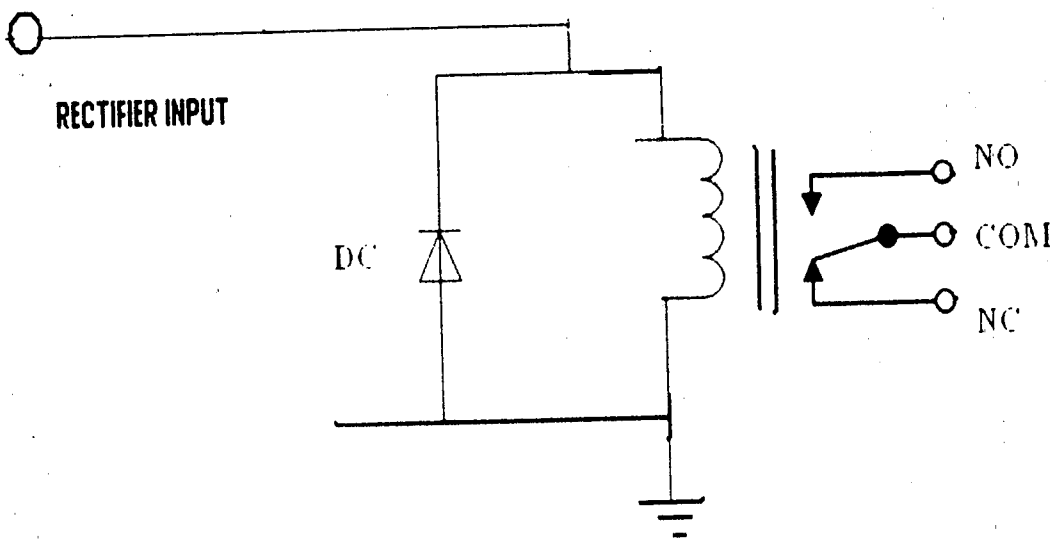

Fig. 3.7 Symbol of an Electromechanical Relay

N.C means normally closed contact

N.O means normally opened contact

DC is the clamp diode which prevent voltage spikes indulged in them

The 12V DC electromechanical relay was used to affect battery power transfer between the charger and the inverter stage. The DC relay was energized by the rectified DC voltage connecting the battery to the charger output as shown in fig3.8 below.

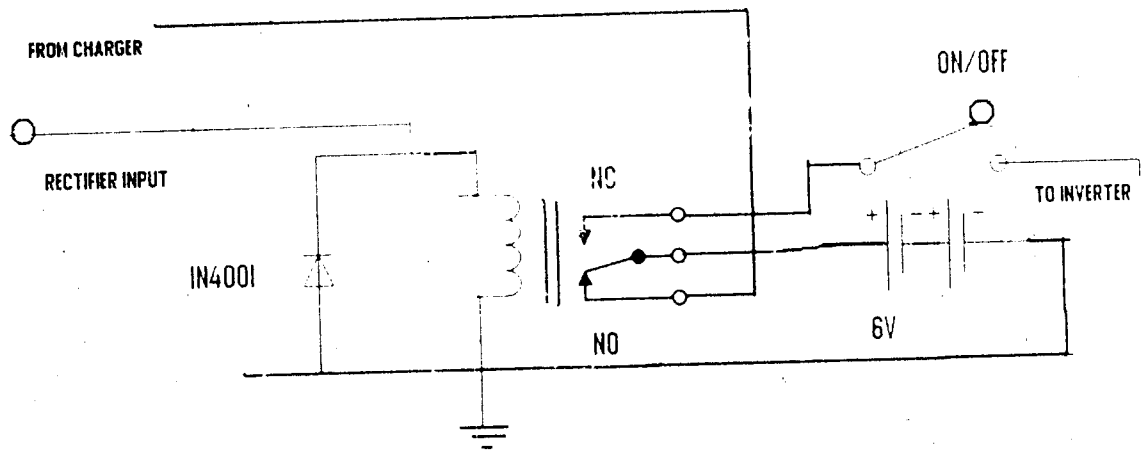

Fig. 3.8 Change Over Unit

With local mains present, the relay is energized and the contact change over to connect the battery to the charger output where it is charged. When AC fails the battery connected to the stand by ON/OFF switch as indicated in fig3.8 above.

3.4 The Battery Charger Unit.

An integrated circuit LM317T, three – terminals adjustable was used to effect charging of integral secondary cell. It is available in several packages such as TO220; TO3 etc. fig3.9 shows a typical LM317T voltage regulator.

Description

- Adjustable Linear Voltage Regulator IC
- Voltage Regulator Type:3-Terminal Positive
- Output Voltage Max:37V
- Output Voltage Adjustable Max, Vout:37V
- Output Voltage Adjustable Min, Vout:1.2V
- Package/Case:3-TO-220

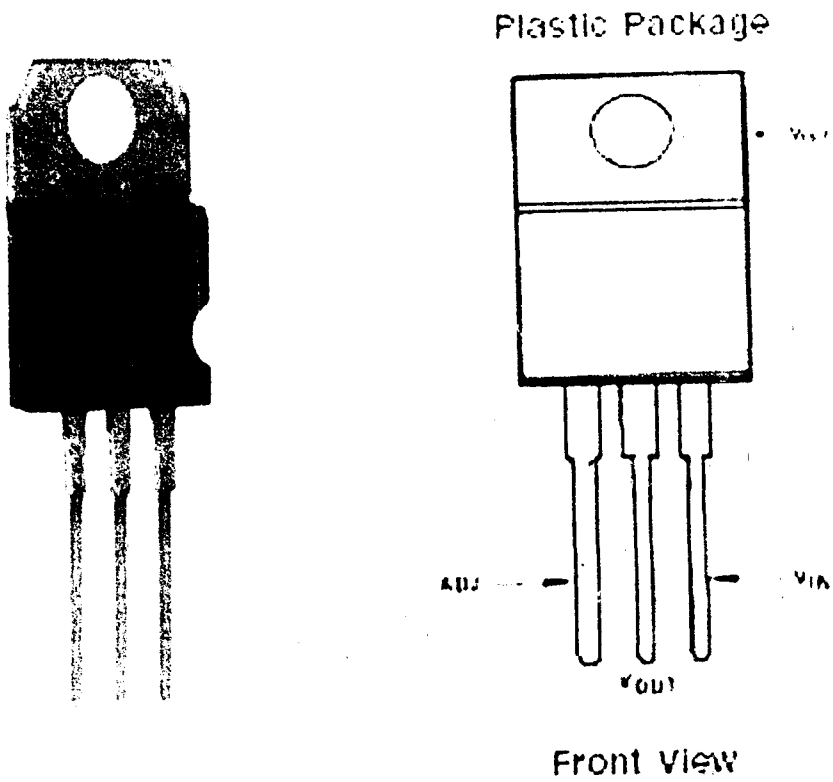

Fig 3.09 Lm317t Voltage Regulator

The device can provide regulated voltage V minimum of 1.2V to V maximum of 37V, with a nominal output current of 1.5A at package dissipation less than that 20W. It has no ground terminal; instead it adjusts Vout to maintain a constant 1.25 volts (band gap) from the output terminal to the adjustment terminal. LM317T is wired as shown below.

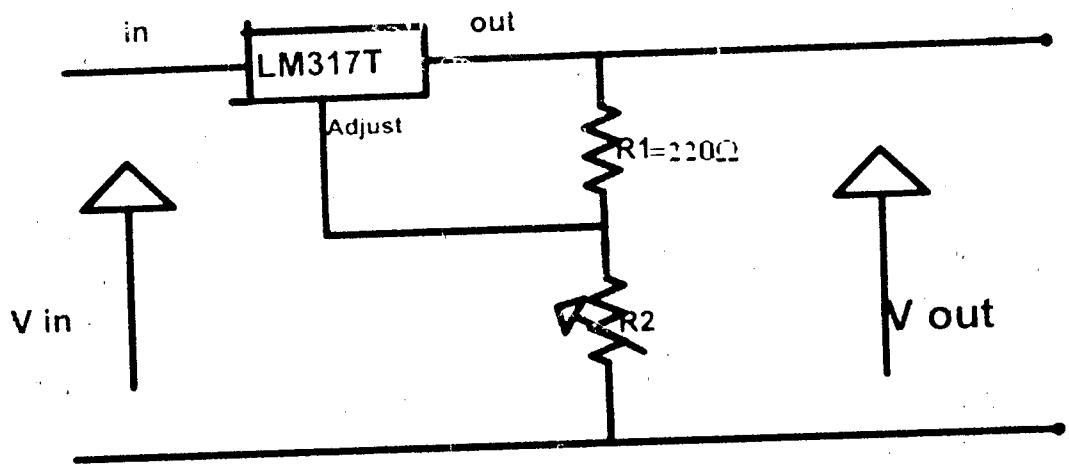

Fig. 3.10 LM317T Voltage Regulater Circuit

The output voltage is giving by the relation:

Vout = (1.25(1 + R2/R1)) V

Where 1.25V = internal reference voltage,

R1 = 220 ohms (from the manufacturer's recommended value.)

R2 = Voltage setting resistance

Note that R2 is normally adjustable only a narrow range.

The device also functions as a current regulator when wired as shown in fig3.11 below.

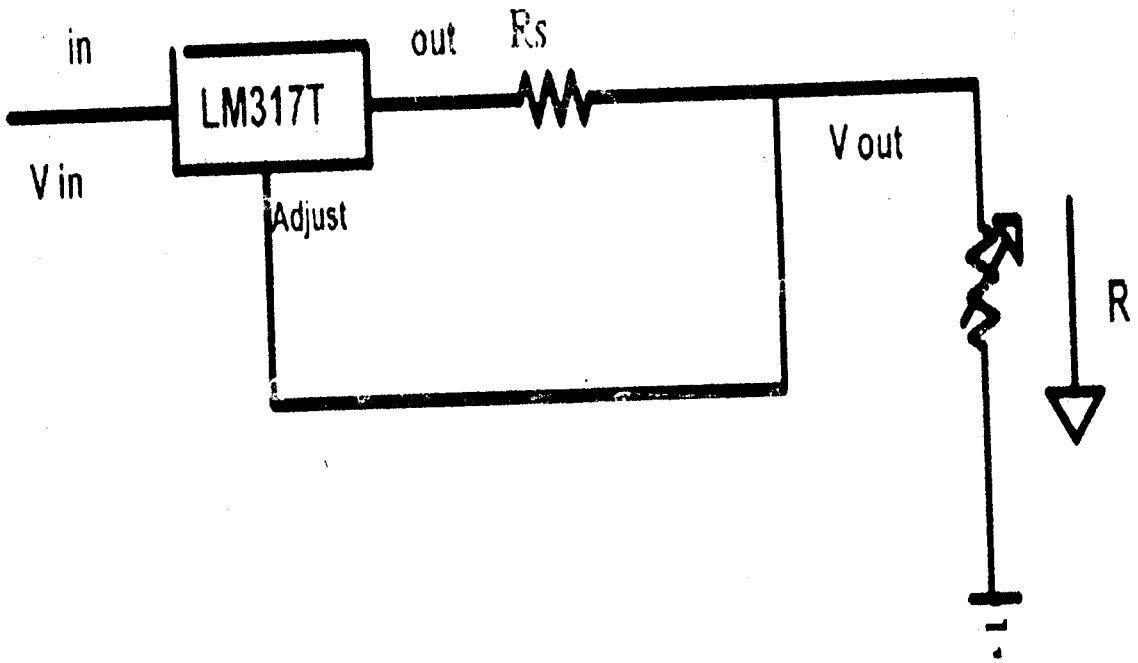

Fig. 3.11 LM317T Current Regulator

When operated as a voltage regulator, the output load current is given by

$$I_{out} = \frac{1.25}{Rs}$$

Where Rs = resistance between the output and the adjusted pin.

A constant – current constant – voltage charger scheme was used in which the battery was initially charged at a constant current at the commencement of the charging system, switching over to the constant voltage mode once the battery attains full charge. The charger circuit is shown below.

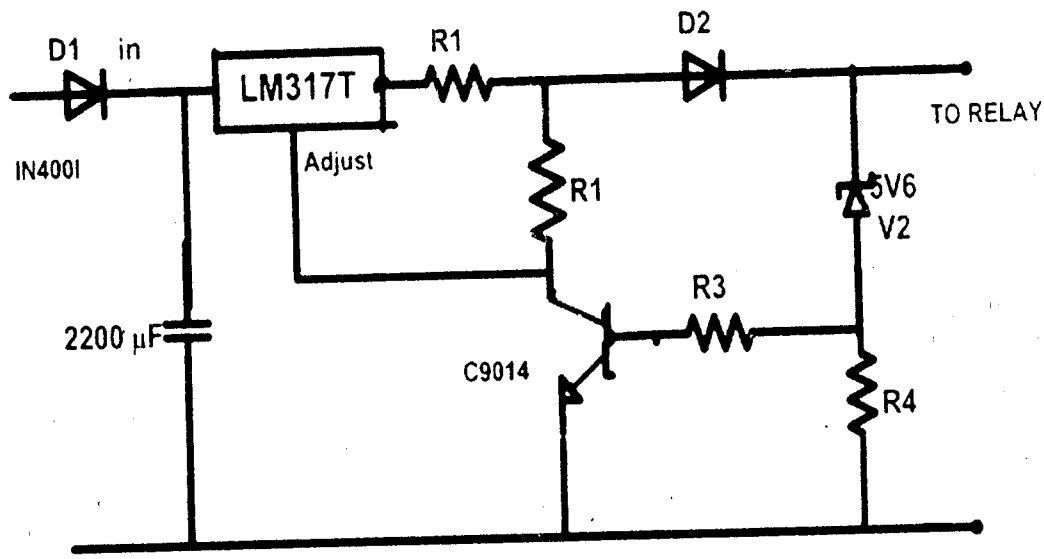

Fig. 3.12 Battery Charger

R1 =Rs was made a 2.7 ohms resistance to supply a maximum charging current of

I out = 1.25 / 2.7

=0.46Amps

Diode D2 prevents back Discharge of the battery when the input charging voltage is removed.

R3 and R4 are biasing elements for Q1(C9014). Q1 provides a shutdown of the LM317T at a maximum battery terminal voltage.

Q1 switches on when Vbe > 0.7V.

The maximum battery terminal voltage was evaluated using the relation.

0.7 = Vbatt – Vz

Vbatt = 0.7 + Vz

0.7 = Vbe forward voltage drop in C9014 NPN silicon transistor

Vz = Zener voltage = 5.6V.

From the given value the battery chargers to a maximum of

(5.6 + 0.7)V = 6.3V.

At 6.3V, the regulator is forced into the power down mode, concessionary waking up to charge the battery if its terminal falls bellows 6.3V.

The current through the 2.2k resistor at full-charge is

$$= \frac{Vbatt - Vz}{R4}$$

$$= \frac{6.3 - 5.6}{2200}$$

$$= 0.7 / 2200$$

$$= 0.3mA$$

The 0.7V turns ON Q1 pulling its collector to 0V. shutting down the regulator.

3.5 The DC back up power supply

3.5.1 The Battery

A battery is a device ideally capable of providing a constant voltage independent of current flowing through it. 6.0V battery was used in this project work.

The circuit symbol of a battery is shown below.

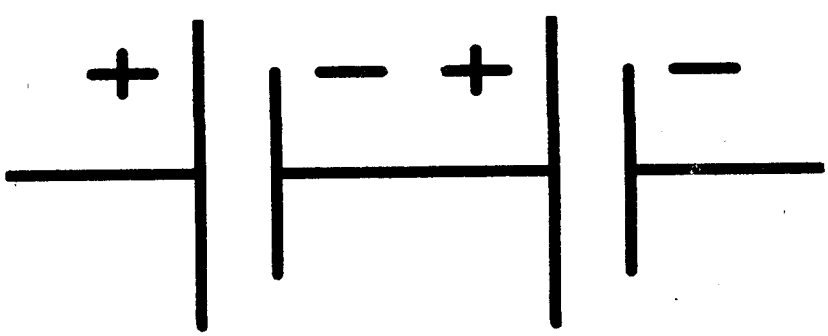

Fig. 3.13 Circuit Symbol of a Battery

Its terminal voltage, decreases linearly under current load as shown in fig3.14 below.

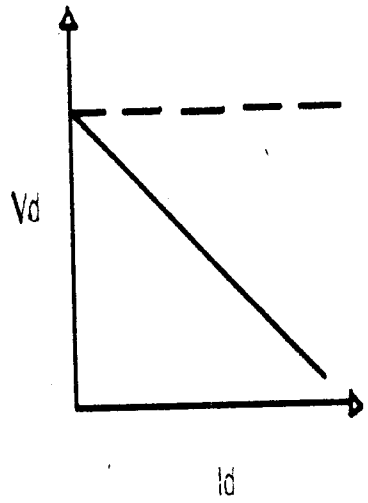

Fig. 3.14A

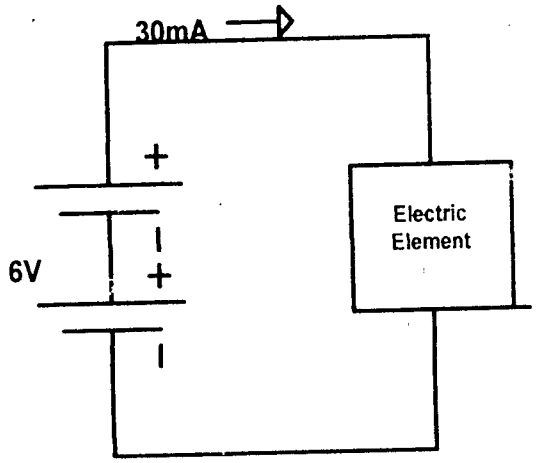

Fig. 3.14B

Thus Vd = IdRs

Where Rs = Load Resistance

Id = Load Current

Vd = Load voltage.

3.5.2 Low Power Royer Dc – Ac Inverter

The DC – AC inverter used in the design work is illustrated in fig 3.15 below. It comprises of two NPN transistors, a high – frequency ferrite transformer and a biased network composed of resistors.

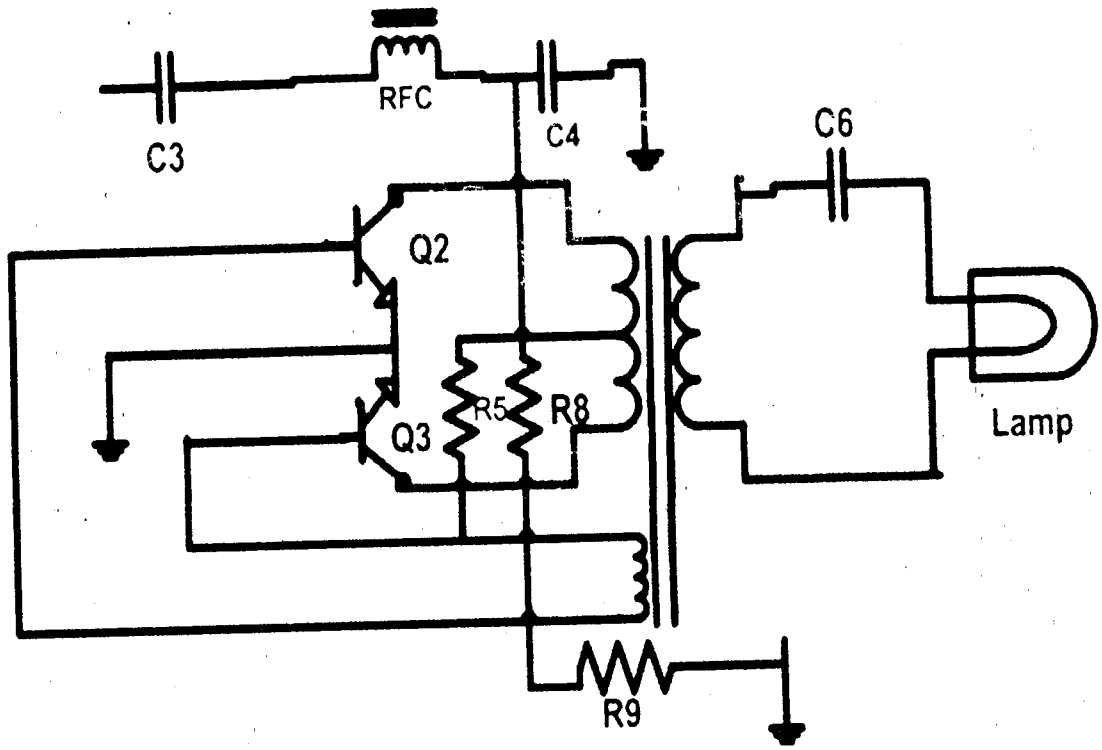

Fig. 3.15 Low Power Royer DC – AC Inverter

The RFC in the fig 3.15 means radio frequency choke, it is to protect the transformer from burning.

Q2 and Q3 is high frequency medium power NPN silicon transistor (D882) they are wired as push pull sinusoidal oscillator working into an LC turned stage of frequency.

$F = (1/2\pi\sqrt{L1C})$ Hz

The resonant frequency is always above 20 KHz (to prevent auditory discomfort in human).

The inductance of L1 was measured using a digital RLC meter and found to be 400 μH.

For a 25 KHz circuit operation, C was calculated to be

$C = [1 / ((2\pi F)^2)L]$

$$C = \frac{1}{(2\pi \times 25 \times 103)\, 2 \times 400 \times 10\text{-}6}$$

$C = 0.1\ \mu f$

Start up current is provided by two 330 ohms resistors and 220 ohms resistor.

Oscillation is guaranteed by the inherent imbalance in transistor specification.

If both transistors are still alike, then the circuit might not oscillate. The imbalance in specifications causes one of the transistors to turn ON faster.

Assuming Q2 has a higher gain than Q3 it turns ON first at power application and hold Q3. Load current and transformer magnetizing current then flows in the upper half of L1 winding. Auto – transformation supplies the base drive unit, Q2 saturates. With Q2 saturated, it loses its base drive and turns OFF. The transformer voltages reverse turning Q3 ON and repeating the cycle.

A sinusoidal AC output voltage is observed across L3 whose values are given by L1: L3 winding ratio.

The high – voltage AC output is fed into the tube via a 1000 pf capacitor.

Circuit Diagram of an Automatic Emergency Lighting System

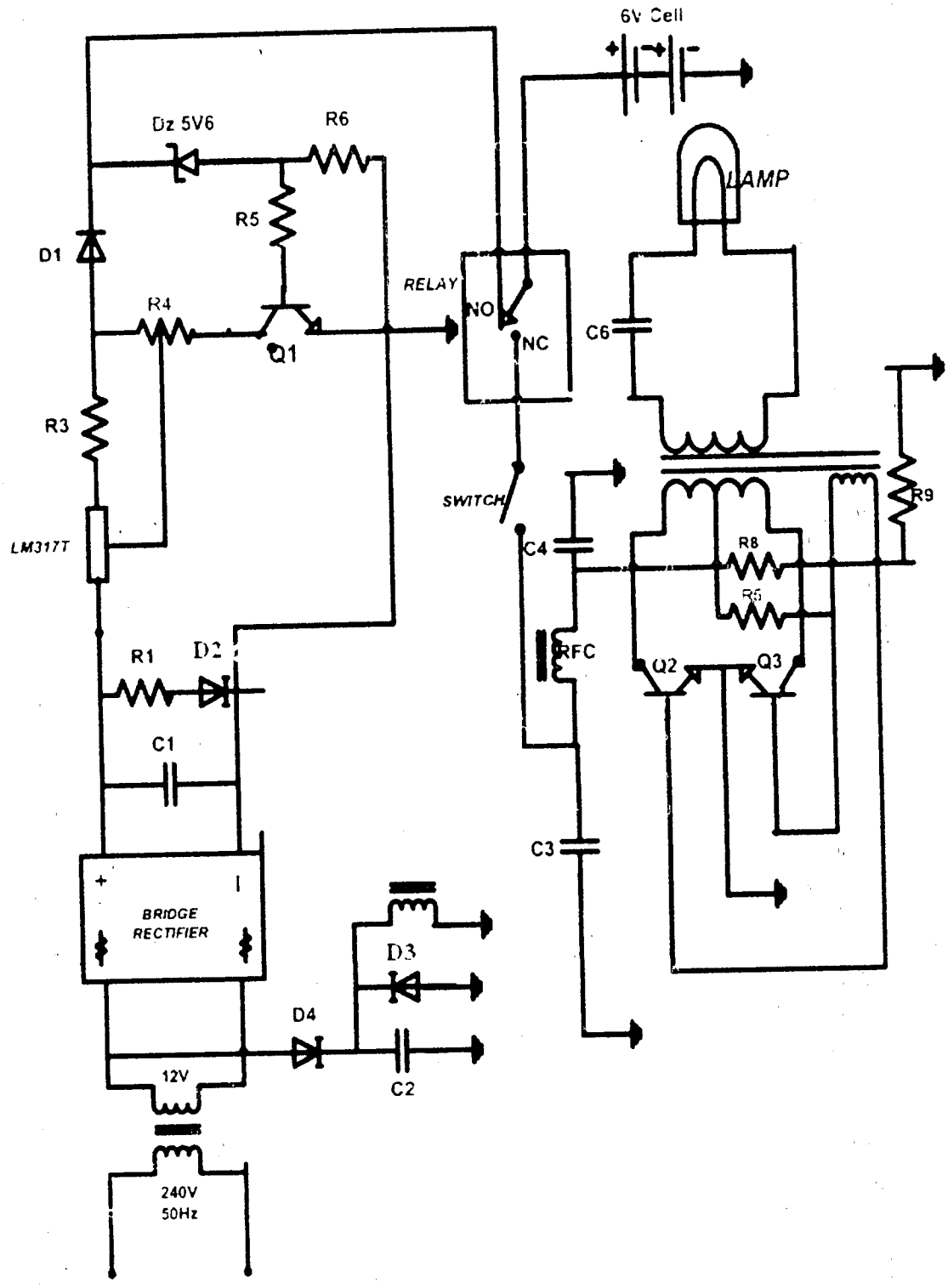

Fig. 5.00 Circuit Diagram of an Automatic Emergency Lighting System

Chapter Four

Tests, Results, and Discussion

4.1 Testing

The testing started right from the beginning of this project work. Each of the components used for the construction of the Automatic emergency lighting system was tested. The circuit was first constructed on a bread board and simulated to ensure its workability. The circuit was proved working properly before its reconstruction on a veroboard. Partial contact of pins and possible short circuit where avoided. All connections where carefully controlled. The system device was plugged to the main AC power supply, the GREEN LED came ON which indicates the activeness of the main and the battery charging operation.

The battery terminal voltage was tested and measured using multi - meter connected across the positive and negative terminals of the battery, the emergency lighting system was tested by putting it under various degrees of loading. The output of the inverter circuit was also measured and tested. While testing, the operation of the battery the green LED bulb came ON indicating the emergency lighting capability. Thus the aim of the project termed Automatic lighting system was successfully achieved.

4.2 Result

The maximum battery power voltage

I.e. Vbatt = 6.290 volts

= approx. 6.3 volts

The inverter output voltage to the fluorescent

Vout = 589.5 volts

= 600 volts

The RMS output voltage is plotted against the load (in kilo-ohms) and it is shown in fig 3.16 bellow.

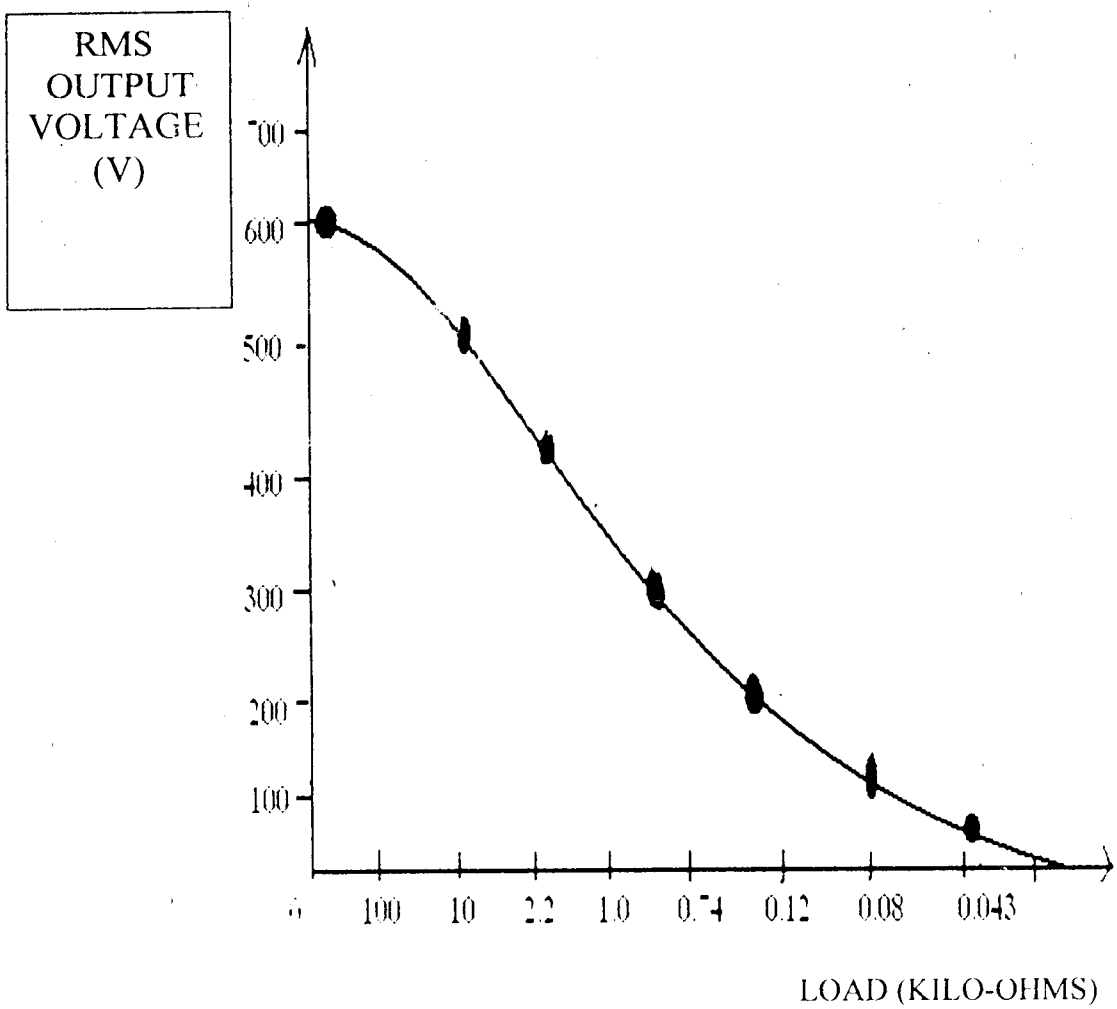

Fig 4.00 Graph of output voltage against load

4.3 Discussion of Results

From the graph above, the RMS output voltage decreases from low loading to high load situation. This means the more load connected to the inverter output, the less the RMS voltage value. Also, the Vout of approximately 600volts provided the potential difference which is able to cause the glowing of the gas discharge fluorescent tube of power rating 20W.

The resulting lighting of the tube when the power from the mains is OFF indicates the successful result of the project and the circuit where functioning throughout the duration of testing.

Chapter Five

Conclusion and Recommendation

5.1 Conclusion

Automatic Emergency Lighting System's design and construction follows the steps of the basic principle of electronics. It is a basic principle which deals with the conversion of AC to DC automatically.

The components used during the design and construction were very common and inexpensive. This project is useful in the areas where power outage is common.

The Automatic emergency lighting system has two main circuits namely the battery charger circuit and the inverter circuit. The battery supplies the power to the inverter circuit through the automatic switch (Relay). It should be of greater advantage if and only if it is been used as substitute at power failure or power outage.

5.2 Recommendation

The following recommendations are made on the project "Automatic Emergency Lighting System" for further improvement on the project.

1. The inverter can be improved upon, to power high power devices like halogen lamps for outdoor illumination.
2. A long lasting battery can be used in place of the used one, to optimize power, increase life span and time of functionality at operation.

References

[1] Oria Usifo, Electrical Network Design and Installation in Building, 2nd Edition Fredorus, 2002. Pp 106

[2] Paul Horowitz and Winfield Hill, The art of Electronics, 2nd Edition, Cambridge university Press. Pp 344-356.

[3] F.G. Thompson. Electrical installation technology volume 3 2nd Edition, Pp 101 102.

[4] Jerry C. Whitere, The Electronics Harvard Book, Pg 473 – 474.

[5] National Semiconductor Data Sheet.

[6] Roger L. Tokhein, Digital Electronics Principles and Application, 6th Ed., Data McGraw – Hill, 2004 Pg 106.

[7] http://www.freepatentsonline.com Last update on 23rd August 2008, Date Visited 16th of September 2008

[8] http://www.Bridge Rectifier Circuit (interface bus).htm

[9] http//:www.FAIRCHILD SEMICONDUCTOR LM317T Voltage Regulators & References Semiconductors - Integrated Circuits Newark_com.htm

[10] http//:www.Sealed Lead-Acid Battery Charger Circuit.htm

Appendix III

Resistors

LABEL	VALUE
R_4, R_5	1.00 Kilo-ohms
R_3	2.70 Kilo-ohms
R_6	2.20 Kilo-ohms
R_7, R_8	0.33 Kilo-ohms
R_9	0.22 Kilo-ohms
R_1	2.30 Kilo-ohms

Capacitors

LEBEL	VALUE	VOLTAGE
C_1	2200UF	25V
C_2. C_3	1000UF	16V
C_4, C_5	0.10UF	-
C_6	1000UF	Electrical Capacitor

Transistors

LABEL	VALUE	TYPE
Q_1	C9014	NPN
Q_2, Q_3	D882	NPN

Transformers

LABEL	VALUE	TYPE
T_1	12V	Step-down
T_2	24V_{CT}	Step-up ferrite Transformer

Diodes

LABEL	VALUE
D_1, D_4 and D_5	IN4001
D_2	5V6, V2 (ZENER)
D_3	LED (RED)

Relay

LABEL	VALUE	TYPE
R_1	12V	Single Pole Double Contact

Battery

LABEL	VALUE	TYPE
B_1	$6V_{DC}$	Physical Battery

Tube---20W Fluorescent

Inductance---400uH

LM317T Voltage Regulator Chip

Manufacturer: FAIRCHILD SEMICONDUCTOR

Newark Part Number: 58K8936

Manufacturer Part No: LM317T