# DESIGN & CONSTRUCTION OF ULTRA VIOLET INSECT EXTERMINATOR

**EKEREKE STEPHEN N.**

**(2003/15356EE)**

ELECTRICAL & COMPUTER ENGINEERING DEPARTMENT

FEDERAL UNIVERSITY OF TECHNOLOGY, MINNA,

NIGER STATE.

NOVEMBER, 2008

# DESIGN & CONSTRUCTION OF ULTRA VIOLET INSECT EXTERMINATOR

BY

EKEREKE STEPHEN N.

(2003/15356EE)

A THESIS SUBMITTED TO THE DEPARTMENT OF ELECTRICAL & COMPUTER ENGINEERING, FEDERAL UNIVERSITY OF TECHNOLOGY, MINNA, NIGER STATE

NOVEMBER, 2008

# DEDICATION

Firstly, I am dedicating this report to God Almighty the giver of life. Also to my late mother, Justina U. Ekereke (Nee Ekprimoh).

# DECLARATION

I, EKEREKE NSIKANABASI STEPHEN, declare that this work was done by me and has never been presented elsewhere for the award of a degree. I also hereby relinquish the copyright to the Federal University of Technology, Minna.

Ekereke Stephen
---
(Name of Student)

7/11/08
---
(Signature and date)

Engr. Emmanuel Eronu
---
(Name of Supervisor)

---
(Signature and date)

Engr. Dr. Y.A. Adediran
---
(Name of H.O.D)

---
(Signature and date)

---
(Name of External Examiner)

---
(Signature and date)

# ACKNOWLEDGEMENT

When kindness could not be return, it should be appreciated and pass unto others. Therefore, in spreading my net of gratitude, I owe special thanks to Almighty God our Creator and Benevolence, who through His plenitude of mercies and blessings kept me throughout my years of studies.

My dad, my brothers and sisters have been very tremendous in their support - morally, financially and in every way. I love you all and also pray that the Almighty God replenish you on every side.

This project work is a product of a will at becoming a member of the revered class of academics, although, this could not have been possible without the collective responsibilities of the lecturers and colleagues.

I therefore, most humbly express my profound gratitude to my supervisor, Engr. Emmanuel Eronu, who inspite of numerous academics engagement has been able to provide necessary and constructive advice. Moreover, his wealth of experience and unflinching support through valuable suggestion and criticisms has led to the success of this work.

I also wish to express my appreciation to the Dean, School of Engineering, Professor J. O. Odigure, my Head of Department, Engr. (Dr) Y. A. Adediran, Dr. Uno, Mr. David Michael, Mr. James Tola and a host of other lecturers.

Similarly, I wish to acknowledge my heartfelt appreciation to my friends and colleagues – Azeez Adebimpe, Seun Lottu, Isaac Dojio, Simon Omerigwe, Chikaodili Obidike, Peter Abraham, Chidozie Obike, Cornelius Adikwu, Clement Ekene, Stanley Chikeluba, Obinna Onyemah, Isaac Odjago, Fred Odeku; for their unflinching support and encouragement. Thanks guys, you were the best!

# ABSTRACT

This project is aimed at designing and building an electronic ultraviolet insect exterminator. Generally, this device is very useful in the aspect of pest control. Though insects play positive role in ecosystem, they sometimes constitute a nuisance predominantly in farming and domestic situations. The eradication of common house pests particularly flying insects which prove difficult, have become a major concern to the common man. Aside destroying vegetation, pests also bites or sting humans and animals causing swellings, sores or even transmits diseases. For many years, scientists have come up with various methods of curbing the spread of these insects and the diseases they carry. Pesticides and other chemical insecticides have been relatively successful in agriculture but have proved dangerous for domestic purposes. This project offers a better, neater and more modern approach to handling these unwanted insects. It makes use of the principle of ultra-violet light. When insects are attracted to it at frequencies which vary according to their species, the attracted insects on reaching the device are electrocuted by the wire grid encasing the device. An added advantage is that this device can be used even when power supply (electricity) fails. This is achieved with the use of an uninterruptible power supply (UPS).

# TABLE OF CONTENTS

Dedication ..... ii

Declaration ..... iii

Acknowledgement ..... iv

Abstract ..... vi

Table of Content ..... viii

List of Figures ..... xi

List of Tables ..... xii

**CHAPTER ONE: INTRODUCTION**

1.1 Introduction ..... 1

1.2 Procedure/Methodology ..... 3

**CHAPTER TWO: THEORETICAL BACKGROUND**

2.1 Literature Review ..... 5

2.2 The Principle behind the Ultraviolet Insect Exterminator ..... 7

2.2.1 Principle of Ultraviolet Light ..... 7

2.2.2 The Insect Eye ..... 10

2.2.3 The UV – A Region ..... 11

2.2.4 The Operation of Ultraviolet Light Traps ..... 11

2.2.5 Operation of the Uninterruptible Ultraviolet Light Insect Zapper ... 12

2.2.6 Block Diagram Illustration ..... 13

**CHAPTER THREE:DESIGN AND IMPLEMENTATION**

3.1 Characteristics Features of Relevant Circuits and Components of the Device ... 14

3.1.1 Power Supply ..... 14

3.1.2 Full Wave Bridge Rectifier ..... 16

3.1.3 Mode of Operation of the Full Wave Rectifier ..... 17

3.2 The Lead-Acid Battery Charger ..... 18

3.2.1 The LM317T Regulator..... 19

3.2.2 The Rechargeable Battery ..... 21

3.2.3 Change Over State ..... 24

3.3 Royer Converter ..... 26

3.3.1 The Insect Exterminator Circuit ..... 28

3.3.2 The Ultraviolet Fluorescent Lamp ..... 29

3.3.3 The Voltage Grid Design and Arrangement ..... 29

**CHAPTER FOUR: DESIGN ANALYSIS**

4.1 Discussion ..... 31

**CHAPTER 5:CONCLUSION AND RECOMMENDATION**

5.1 Conclusion ..... 35

**REFERENCES** ..... 36

# LIST OF FIGURES


FIG. 2.O - The light portion of the Electromagnetic Spectrum ..... 8

FIG. 2.1 - The Common Ultraviolet Band Designations ..... 9

FIG. 2.2 - Block Diagram of Project ..... 13

FIG. 3.0 - The Power Supply ..... 14

FIG. 3.1 - The Full Wave Bridge Rectifier ..... 17

FIG. 3.2 - The Battery Charger ..... 18

FIG. 3.3 - Constant – Current Regulator ..... 20

FIG. 3.4 - Change Over State ..... 24

FIG. 3.5 - High Frequency Resonant Inverter ..... 26

FIG. 3.6 - The Exterminator Circuit ..... 28

FIG. 4.0 - Comprehensive Circuit Diagram of the Project ..... 34

# LIST OF TABLES

TABLE 3.1 - Sizes and Weight of Common Lead-Acid Battery ..... 22

TABLE 3.2 - Effect of Temperature on the Capacity of Lead-Acid Battery ..... 23

# CHAPTER ONE

# INTRODUCTION

The spread of insects and diseases are becoming more in the world, most especially, tropical regions like West Africa. The rate at which diseases like diarrhea, dysentery, malaria, west Nile virus, Yellow fever, Filariasis, Dengue fever and Encephalitis are spread is increasing everyday. It kills and debilitates millions of persons world wide even with today's advances in medicine. This has been a major concern for the health sector. [2]

Insects, even as a nuisance biter, they can have a major negative impact on a local economy by inhibiting recreational or work environments. In addition to inflicting diseases on the human population, these diseases when not checked often lead to death. The low standard of environmental sanitation aid the spread of these diseases. [9]

Research and development over the years have come up with a variety of pesticide, insecticides, repellants, and other chemicals which are relatively effective yet harmful. Researches have shown that in addition to possible skin and eye irritation, prolonged exposure to these chemicals may cause cancer or respiratory related diseases or conditions. This disadvantage clearly shows that this form of pest control is inappropriate for human use. [4]

Another disadvantage which can be seen when observed on a larger scale is air pollution which can lead to environmental hazards. Even when these disadvantages are

assumed not to exist, one more disadvantage still persists. That disadvantage is based on the fact that these insects over a period of time begin to develop a resistance to these chemicals and thus renders them ineffective. [7]

Even though, this project is based primarily on the biological behavior of insects, it is backed up by basic physics principles. Looking at this case from an engineering perspective, we make use of this behavior to attract the insects to where the electronic aspect takes place.

Some insects are attracted to the common fluorescent light under normal condition. But all insects are attracted to the white-blue ultra-violet light depending on the frequency. According to biological studies, insects can see ultra-violet light unlike the human eye, to which is undetectable. [7]

Insects on seeing the ultra-violet light are attracted and subsequently electrocuted by the charged wire grid surrounding the device. This is possible with the aid of a multi-staged internal circuit as well as a replaceable and rechargeable battery.

It is thus clear to see the advantages of using this device, which can be summarized as follows:

- It allows for a more environment friendly approach to pest control with no pollution whatsoever.
- It is cost effective. It is relatively affordable and easy to maintain.
- It can be use irrespective of the electricity situation, which is appreciative in the country due to incessant power failure.
- It is definitely safer health wise.

- It can provide round the clock efficient extermination without any inconveniences unlike the insecticides when spray, areas has to be evacuated for some time.

## PROCEDURE / METHODOLOGY

The procedure employed in relaying this project is highlighted in the order indicated below:

- Research literature
- The design
- The construction
- The experimental testing
- The conclusion

These divide the project into five sections. The introduction involves the scope of the project and it highlights the importance of this device and its advantages over other techniques of pest control.

Chapter two, will deal with the literature of the research and theory behind the project. This includes the behavior of insects and how ultra-violet light affects them as well as other principles related to this project.

Chapter three handles the discussion on the components and the circuit characteristics that influence the general performance of the device.

Chapter four, deals with the analysis of the design. This includes information on all useful assumptions and calculations made in the determination of the relevant circuit component specifications.

Finally, chapter five will deal with the conclusion and recommendations for future expansion or project work.

# CHAPTER TWO

# THEORETICAL BACKGROUND

## 2.1 LITERATURE REVIEW

The uninterruptible ultra-violet insect exterminator is basically an electronic device that attracts insects such as houseflies, mosquitoes, cockroaches and so on. This device makes use of ultra-violet (UV) light, which attract the insect and a short circuit grid.

For each and every one of us, when faced with the problem of household pests most especially mosquitoes, have the natural instinct to buy some form of insecticides or the other. Raid, Mortein, Baygon, Mobil are some examples of common household chemical insecticide sprays. Another form is burning mosquito coils or the other substance believed to repel or kill mosquitoes.

Some people still use the old but still widely accepted method, the mosquito net. Whichever traditional we choose, there still remains an advantage of using this ultra-violet exterminator over them. For example, as for the use of mosquito nets, if one has mosquitoes in his/her home, he/she cannot start putting mosquito nets all over the house. You cannot have nets at every inch of your house and even if you do, it will probably make the house look untidy and horrible.

Those who use mosquito coils have to burn their coils in areas they consider mosquito infested. Using these coils as well as the chemical insecticides actually affects the health of its users. It could either be on a long term basis or it could be almost immediate. Several inflammations and conditions may arise in the nasal, bronchial or the lung areas even if they are used properly.

There is the inconvenience of buying one insecticide after another or buying coils on a regular basis. The insect exterminator needs only to be connected to a power supply and can last for up to 6 months and above. The only parts that may need replacing are the UV lamps which naturally cannot last forever. So it is definitely more convenient to use this device as it eliminates the disadvantage of these traditional means of pest control.

Late Engr. Awe A. O. of this great university did succeed in constructing a similar device which also makes use of the ultraviolet lamp but in place of using short circuit grid to electrocute the insects, he makes use of a heating grid. In addition, Late Engr. Awe also constructed the device without a backup (UPS).

A further step has been taken in my project by constructing the insect exterminator with a backup (rechargeable battery) in order to achieve the property of being uninterruptible. Imagine in a country like Nigeria, a man using this electronic device is asleep in his bedroom and the unreliable NEPA takes power. The device Late Awe constructed will become totally ineffective and I'm sure the man will wake up with a swollen body filled with mosquito bites, but with the aid of the backup, the device can be used even when there is no light for a considerable amount of time.

## 2.2 PRINCIPLE BEHIND THE ULTRAVIOLET INSECT EXTERMINATOR

### 2.2.1 PRINCIPLE OF ULTRA VIOLET LIGHT

What is Ultraviolet Light?

Ultraviolet light is a short wavelength light that is beyond the visible spectrum at the violet end of the electromagnetic spectrum that is invisible to the human eye but can damage objects. Ultraviolet (UV) light can be described as particular colors of light which are so blue that almost cannot be seen by the human eye. [14]

Ultraviolet light from the sun reacts highly with many chemicals in the atmosphere and controls many aspects of climate and weather. UV light also reacts with human skin at certain wavelength to cause suntans and sunburns, which can sometimes lead to skin cancer and can cause fading of paints finishes, carpets and fabrics on direct exposure. UV is the portion of the electromagnetic spectrum extending from the violet, or short wavelength end of the visible light range to the X-ray region. [14]

Ultraviolet (UV) radiation, though undetectable by the human eye may cause them to fluoresce (i.e. emit electromagnetic radiation of lower energy, such as visible light) when it falls on certain materials.

Light is just one portion of the various electromagnetic waves flying through space. Short wavelength UV light exhibits more quantum properties than its visible and infrared counterparts.

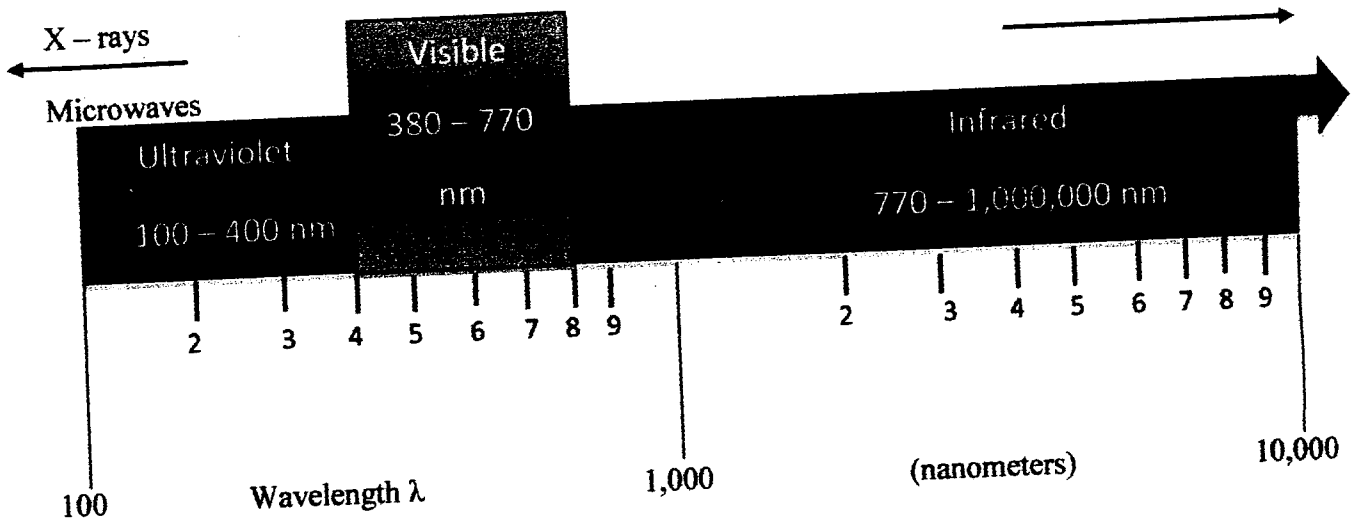


FIG. 2.0 THE LIGHT PORTION OF THE ELECTROMAGNETIC SPECTRUM

Ultraviolet light is arbitrarily broken down into three bands, according to its anecdotal effects. [14]

- **UV-A** – This is the least harmful and most commonly found type off UV light, because it has the least energy. UV-A light is often called ***black light***, and is used for its relative harmlessness and its ability to cause fluorescent materials to emit visible light – thus appearing to glow in the dark. Most phototherapy and tanning booths use UV-A lamps.

- **UV-B** – This is typically the most destructive form of UV light, because it has enough energy to damage biological tissues, yet not quite enough to completely absorb by the atmosphere. UV-B light is known to cause skin cancer. Since most of the extraterrestrial UV-B light is blocked by the atmosphere, a small change in the ozone layer could dramatically increase the danger of skin cancer.

- **UV-C** – Is almost completely absorbed in the air within a few hundred meters. When UV-C photons collide with oxygen atoms, the energy exchange causes the formation of ozone. UV-C is almost never observed in nature, since it is absorbed so quickly. Germicidal UV-C lamps are often used to purify air and water, because of their ability to kill bacteria.

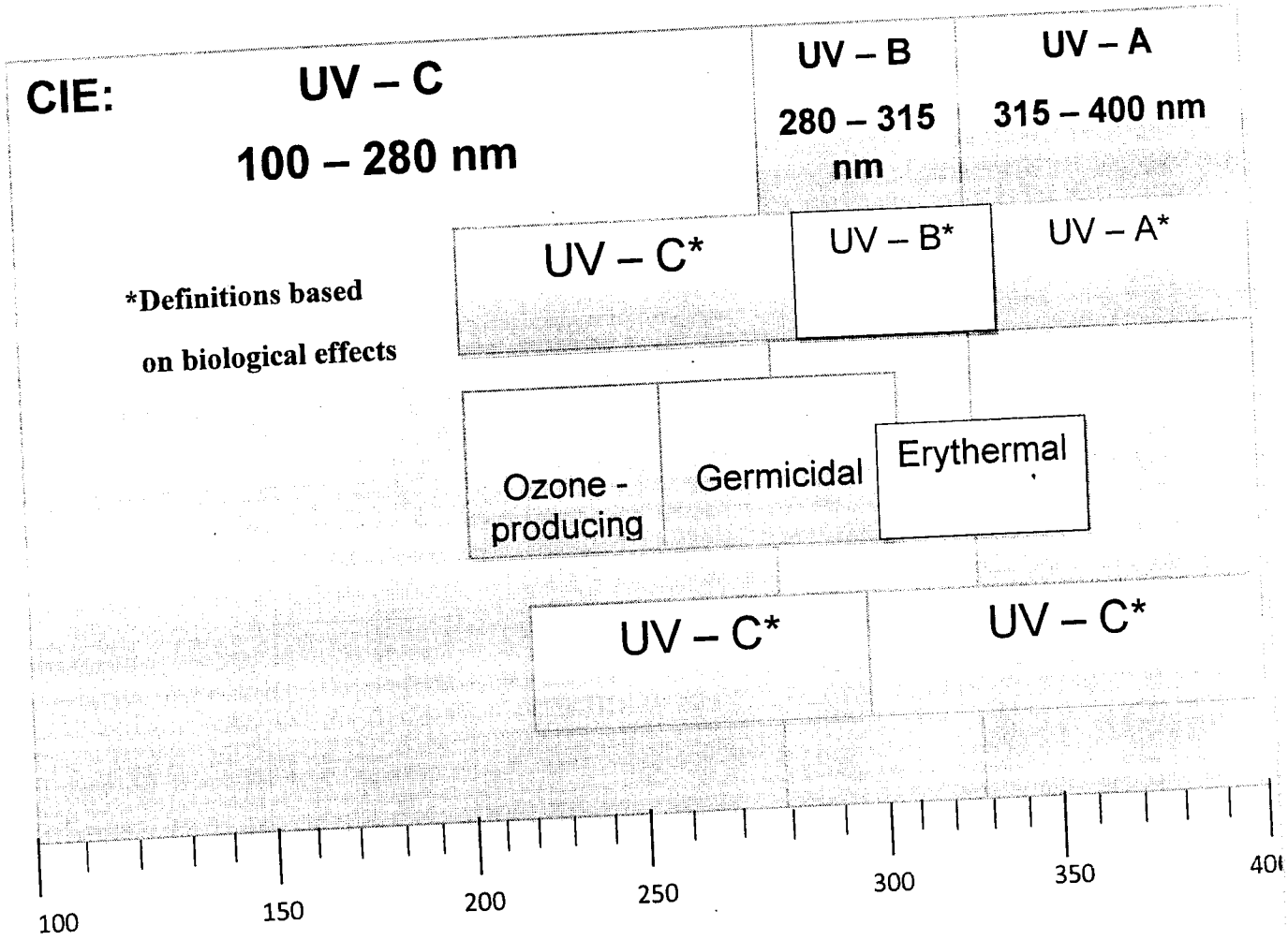


FIG. 2.1 THE COMMON ULTRAVIOLET BAND DESIGNATION

### 2.2.2 THE INSECT EYE

Arthropod eyes are called ***compound eyes***. These are made up of repeating units, the ***ommatidia,*** each of which functions as a separate visual receptor.

Each ommatidium consists of

- **a lens** (the front surface of which makes up a single facet)
- a transparent **crystalline cone**
- light sensitive **visual cells** arranged in a radial pattern like the sections of an orange
- **Pigment cells** which separate the ommatidium from its neighbors.

The pigment cells ensure that only light entering the ommatidium parallel (or almost so) to its long axis reaches the visual cells and triggers nerve impulses. Thus each ommatidium is pointed at just a single area in space and contributes information about only one small area in the field of view. [6]

There may be thousands of ommatidia in a compound eye with their facets spread over most of the surface of a hemisphere. The composite of all their responses is a **mosaic** image (i.e. a pattern of light and dark dots rather like the halftone illustrations in a newspaper or magazine). The compound eye is composed of many units. Unlike the single-lens eye common in other animals including man, insect eyes can have thousands of lenses. The common dragonfly has over 10,000 lenses per eye. [6]

Insect eyes do not respond equally to all wavelengths of light. For instance, insects do not see well in the longer wavelengths. For this reason, insects do not perceive red lights. On the other hand, insects are especially sensitive to shorter wavelengths, including ultraviolet light. Many flowers are attractive to insects, not because of the color pattern we see, but because of the UV light reflection. Engineers have exploited the UV light attraction of insects to lure them to the project at hand.

### 2.2.3 THE UV-A REGION

The A-region of the ultraviolet light spectrum from **FIGURE 2.1** is of long wave nature. It begins at 380 nanometers and ends at about 315 nanometers. This range of wavelength exerts a massive attraction on the insects. When insects pick up this light from an ultra violet light emitting source, the message it receive is that of an unobstructed path of flight ahead. It can be noted that ultraviolet sensitive receptors in the compound eyes has maximum absorption rate of 365 nanometers.

### 2.2.4 THE OPERATION OF ULTRA VIOLET LIGHT TRAPS (A-REGION)

The principle of operation of an ultraviolet-A light insect trap can easily be understood from the above fundamental behavior of insects. Tube type fluorescent lamps with a rating of between 4 to 40 watts are used to provide the light source. These lamps emit a bluish-white that contains a certain portion of light in the 365nm radiation region.

If an insect's behavioral circumstance is conducive to flight, this light will exert a luring effect on it as the light communicates to the insect that open flying space is available. The ultraviolet light emitting tubes are arranged/enclosed within either a high voltage grid/plate combination designed to electrocute the insects, by means of a short-circuit spark, as they land or a heated grid which burns the insects on contact. The short-circuit spark grid is used for the purpose of this project.

### 2.2.5 OPERATION OF THE UNINTERRUPTIBLE ULTRAVIOLET LIGHT INSECT ZAPPER.

The uninterruptible ultraviolet insect trap or zapper is very similar in operation to most other ultraviolet-A insect traps. They all work on the same principle of attraction and a high voltage grid/plate combination is also used to either electrocute or burn the insects. The only significant differences are the inclusion of additional circuits for the backup power supply, which makes the device flexible.

The principle of operation of the uninterruptible ultraviolet light insect zapper is based on a backup power and a voltage multiplier circuit which steps up the mains voltage either from the backup battery of the NEPA (public supply) for the grid. A charge circuit provides the power required to charge the battery to its required voltage after use.

The battery is couple with a push-pull amplifier, a driver stage and an oscillator stage. In the presence of public power supply, the device gets the required voltage (220

tubes. This attracts the insects that perceive UV light in the range of 380nms to 3315nms. When this external supply is not available, the backup up battery is activated.

### 2.2.6 BLOCK DIAGRAM ILLUSTRATION

Figure 2.2 below shows the block representation of the circuits and components that make up the device.

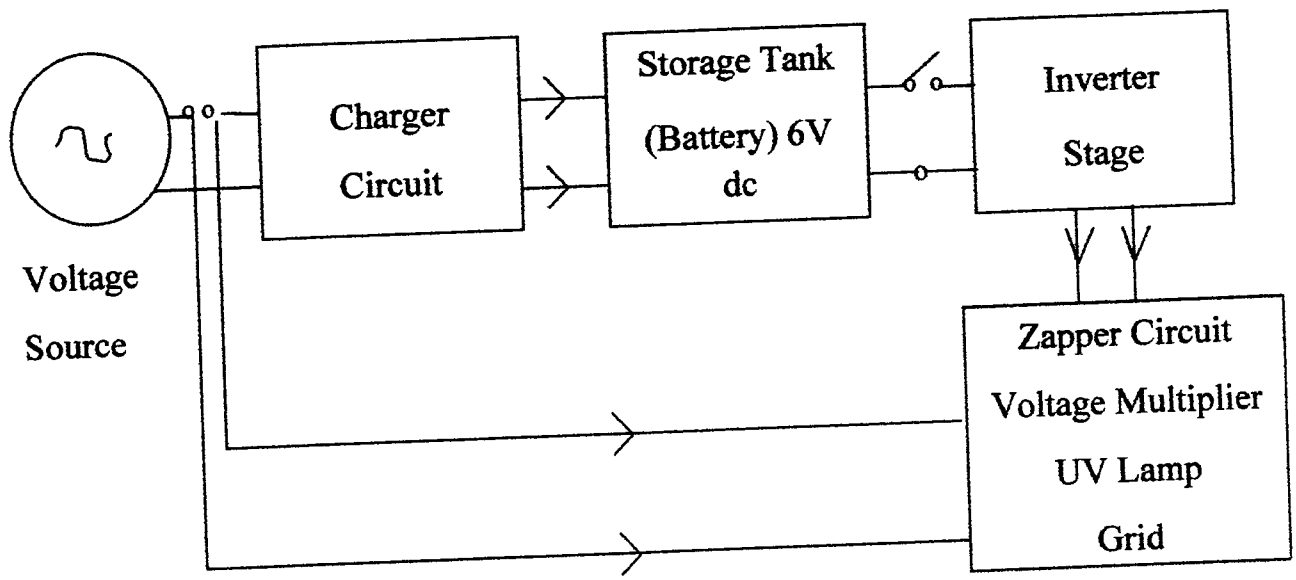


Fig. 2.2 Block Diagram of the Project

# CHAPTER THREE

# DESIGN AND IMPLEMENTATION

## 3.1 CHARACTERISTIC FEATURES OF RELEVANT CIRCUITS AND COMPONENTS OF THE DEVICE.

### 3.1.1 POWER SUPPLY

This device was designed around a 12V 0.5A step down transformer wired to a bridge rectifier as illustrated in figure 3.0

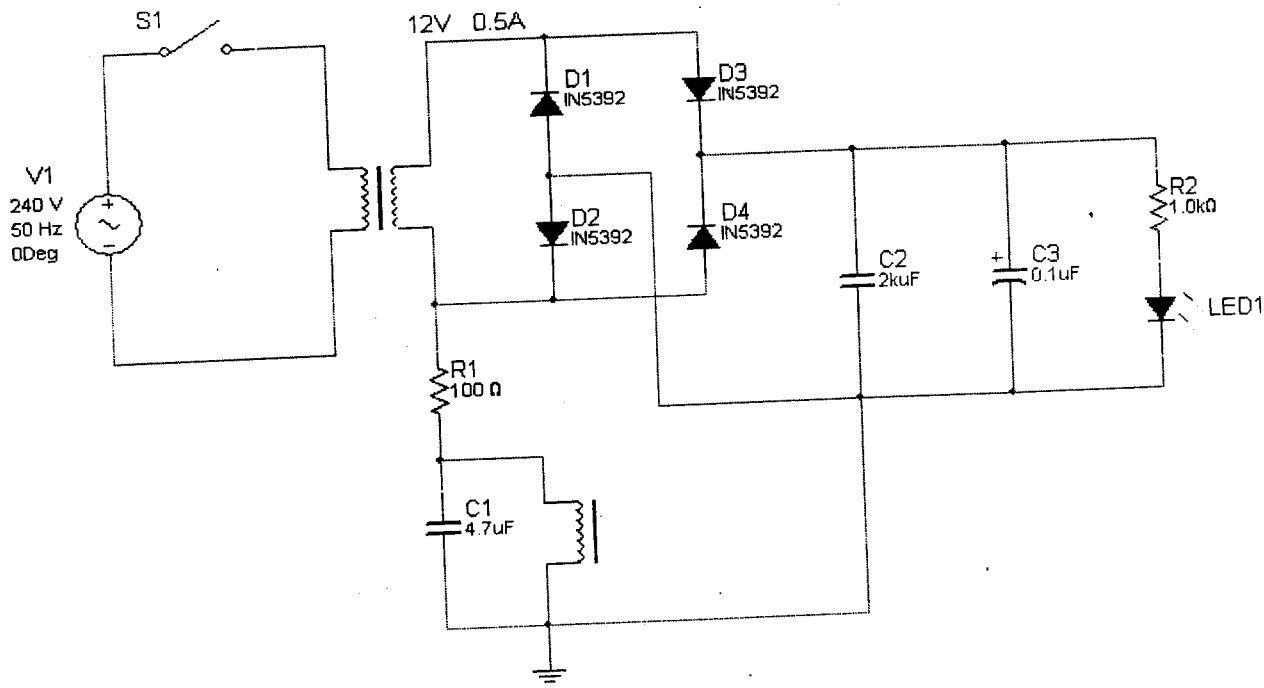


FIG 3.0 THE POWER SUPPLY

The output DC voltage had peak amplitude given by the expression,

$V_{peak} = (V_{rms}\sqrt{2} - 1.4)V$ ---------- equation 3.0

At 240V live level, the rectifier output voltage was;

$V_{peak} = (12\sqrt{2} - 1.4) \cong 15.6V$ ---------- equation 3.1

The DC voltage was smoothened by a capacitance deduced from the equation.

$Q = CV = It$ ---------- equation 3.2

$$C = \frac{It}{V}$$ ---------- ---------- equation 3.3

where I = maximum load current

t = ½ x F;

F = mains frequency (50Hz)

V = maximum allowable AC ripple

The power supply was designed primarily to provide charging current for a lead acid rechargeable battery at terminal voltage of about 6.2V using an LM317T regulator.

For the LM317T device, the regulator requires at least 2V overhead relative to the output voltage. Thus, for a 6.2V output voltage, the minimum DC input voltage was 8.2V. On a 15.6V supply, this corresponds to (15.6 – 8.2 = 7.4V) peak – peak AC ripple voltage.

The maximum load current was fixed at the maximum the transformer can supply, i.e. 0.5A. Using the previous expression;

$$C = It / V$$

$$C = \frac{0.5 \times \frac{1}{2 \times 50}}{7.4}$$

$$C = \frac{0.005}{7.4} \cong 680\mu F$$

The above value is the minimum capacitance required to meet the system's worst case specifications. To improve the specification, the 680μF capacitance was increased to 2200μF.

### 3.1.1 FULL WAVE BRIDGE RECTIFIER

The circuit of figure 3.1 is a full wave bridge rectifier that does not need a center tapped transformer. As shown, all the secondary voltage is used for the D.C. output voltage. The full wave bridge rectifier is the most frequently used circuit for D.C. supplies. It requires four diodes and has a maximum voltage $V_{max}$.

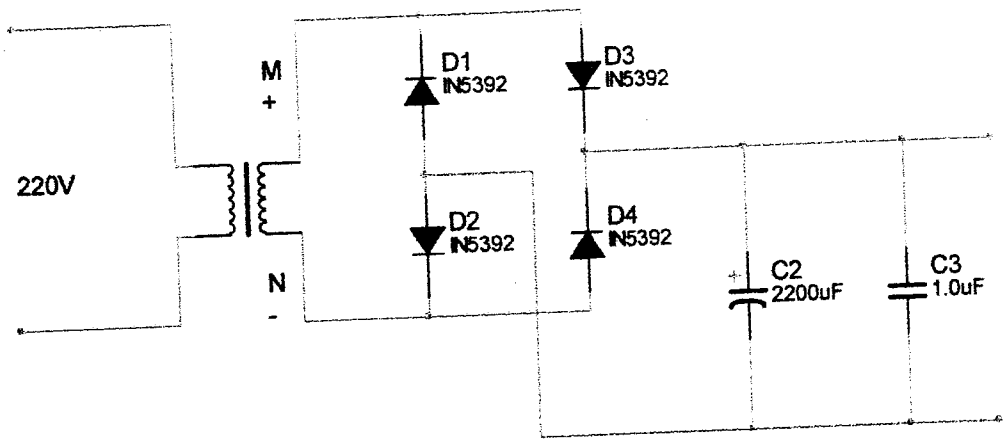


FIG 3.1 FULL WAVE BRIDGE RECTIFIER

### 3.1.2 MODE OF OPERATION OF THE FULL WAVE RECTIFIER

From the diagram above, during the positive input half cycle, terminal M of the transformer secondary is positive while the terminal N is negative as shown in figure 3.1

The diodes $D_1$ and $D_3$ become forward biased (ON) and $D_2$ and $D_4$ become reversed biased (OFF). Therefore, current flows from the terminal M to N by the path shown in the diagram.

The secondary terminal N becomes positive and M negative during the negative input half cycle. The process is reversed as $D_2$ and $D_4$ are now forward biased while $D_1$ and $D_3$ are reversed biased. Current now flows along a different path.

There are advantages in using the full wave bridge rectifier. These include the facts that:

- As mentioned earlier, no centre tap is required on the transformer

- Similar transformer are required
- It is suitable for high voltage applications

## 3.2 THE LEAD-ACID BATTERY CHARGER CIRCUIT

The figure below shows a charger circuit, which is a combination of a 3-terminal IC voltage regulator and other discrete devices. The charger circuit was responsible for supplying the battery with the regulated D.C. voltage needed to charge it to its required voltage of 6volts D.C.

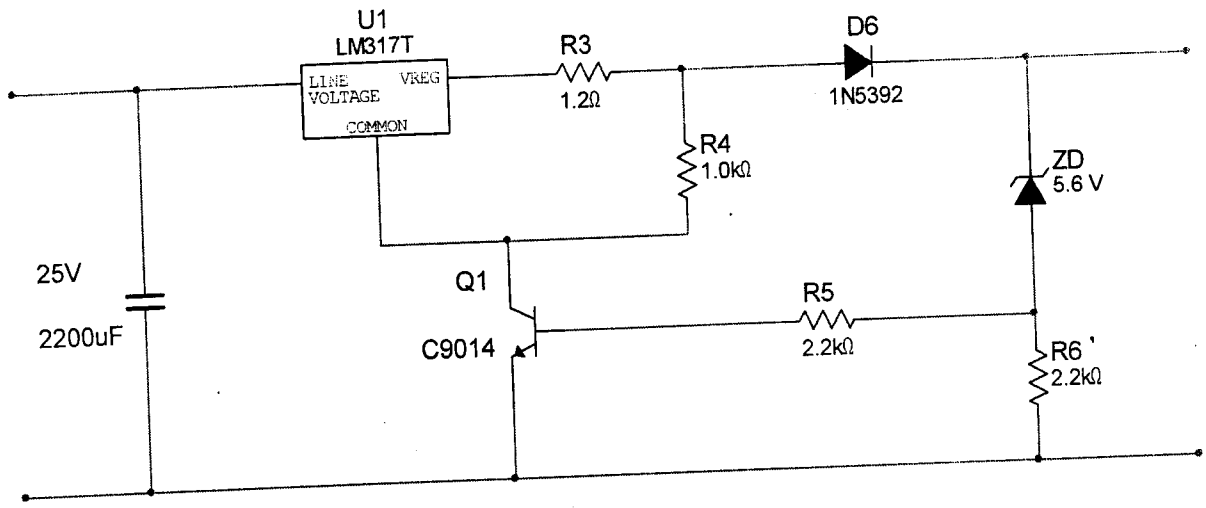


FIG 3.2 THE B ATTERY CHARGER

The charger was configured to emulate the charging characteristics of the lead-acid secondary cells. From technical specifications, a lead acid cell is expected to be charged at a minimum current deduced from the equation;

$Q = It = Ah$

$I_{Min} = Ah / 20$

The maximum charging current is expected not to exceed;

$I_{max} = Ah / 5$

where Ah = Ampere/hour capacity of the battery.

The incorporated battery had an ampere/hour capacity of 4.5Ah. Thus, the minimum charging current was;

$4.5 / 20 = 0.225A$

The maximum charging current was;

$4.5 / 5 = 0.9A$

### 3.2.1 THE LM317T REGULATOR

The LM317T device was configured for a charging current of about 1.05A according to the equation;

$I_{out} = 1.25 / R_S$

The regulator was configured for both constant-current and constant-voltage operations. In the constant-current mode, the regulator reduces to;

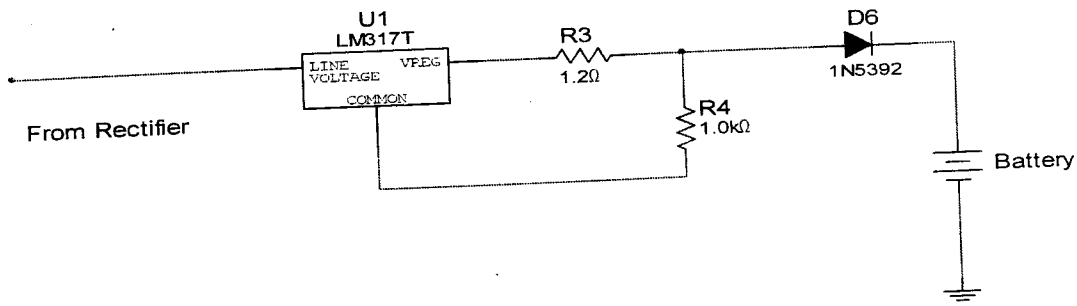


FIG 3.3 CONSTANT-CURRENT REGULATOR

The maximum output current when operated in the constant-current mode is given by;

$I_{out(max)} = 1.25 / R_S$

1.25 = Internal Reference Voltage

$R_S$ = Resistance between the output and adjust pin.

The LM317T has a maximum output current of 1.5A.

In the constant-current mode the output current cannot exceed the measured value. Thus, the maximum battery charging current cannot exceed 1.05A. The charger is

operated in constant-current mode only at the commencement of the charging process, when the battery terminal voltage is insufficient to biased Q1 into conduction.

At the end of the charging process, the battery terminal voltage is sufficiently high to cause a voltage drop of approximately $V_{be}$ across the 5.6V Zener diode. With $V_b$ at about $V_{be}$, Q1 is forward biased and the adjust pin of the LM317T is pulled to ground, shutting off the charger.

The maximum battery terminal voltage is given by the voltage at which Q1 just comes on. This occurs when the voltage drop across Z1 is about 0.7V i.e. $V_{batt(max)} = 5.6 + V_{be} \cong 6.3V$.

The IN5392 diode in the output load of the charger prevents back discharge of the battery with the input charging current removed.

### 3.2.2 THE RECHARGEABLE BATTERY

Although there are a variety of secondary or rechargeable batteries which include nickel-cadmium, silver-zinc and lead-acid; the lead-acid is used for the purpose of this project.

It is important to realize that the capacity and the power capability of a rechargeable battery depend largely on its prior history. Most times, the capacity of a lead-acid battery builds up during the early cycle life, then maintains a somewhat

uniform value for most of its useful life; and finally drops considerably towards the end of its useful life. Usually, a battery displays its greatest capacity when discharged at low rates. For lead-acid batteries, this rate is given as 20-h rate. The term '20-h rate' implies that the battery is discharged at a current that will exhaust the capacity of the battery in 20-h.

The lead-acid battery was used because of its commercial abundance and the availability of different sizes and shapes to fit a broad range of requirements. Some commercially important lead-acid are shown in the table below.

TABLE 3.1 Sizes and Weights of Common Lead-acid Batteries

| Normal size Ah capacity at 20-h rate | No. of cells | Length | Width | Height | Approximate Weight |
|---|---|---|---|---|---|
| 4 | 3 | 2 3/4 | 1 7/8 | 4 | 1 ¾ |
| 8 | 3 | 5 1/2 | 2 | 8 3/4 | 4 |
| 30 | 6 | 8 | 5 3/8 | 9 1/8 | 27 |
| 50 | 6 | 11 1/2 | 7 1/8 | 9 1/8 | 50 |
| 100 | 3 | 10 5/8 | 7 1/8 | 9 1/8 | 46 |
| 200 | 6 | 21 5/8 | 11 1/8 | 10 1/4 | 147 |
| 280 | 1 | 5 1/8 | 6 ¼ | 15 1/4 | 60 |
| 420 | 1 | 5 1/8 | 6 ¼ | 21 3/4 | 84 |

The lead-acid system has a number of characteristics that are particularly noteworthy. Although these batteries do not withstand high temperature storage very well (above $1500^0$F), they do withstand low temperature storage extremely well and are capable of yielding considerable power and operate at low temperatures. For example, the capacity of lead-acid battery is likely to drop off to only about 30% as the temperature drops from room temperature to $0^0$F. Table 3 shows the effect of temperature on the batteries.

In a rechargeable battery, the ability to maintain capacity after charge corresponds to the shelf life in a primary battery. In a conventional lead-acid battery, the charge retention varies considerably from the early stages to the latter stages of life, falling off slowly but continuously as the battery is cycled.

TABLE 3.2 THE EFFECT OF TEMPERATURE ON THE CAPACITY OF LEAD-ACID BATTERIES.

| Temperature $^0$F | Running Time, Hours | | | | | |
|---|---|---|---|---|---|---|
| | 1 | 5 | 10 | 50 | 100 | 500 |
| | Drain Current, Amperes | | | | | |
| 100 | 118 | 21 | 10.0 | 1.4 | 0.6 | 0.06 |
| 80 | 114 | 20 | 9.0 | 1.3 | 0.5 | 0.05 |
| 60 | 106 | 19 | 8.3 | 1.4 | 0.5 | 0.05 |
| 40 | 97 | 17 | 7.5 | 1.0 | 0.4 | 0.04 |
| 20 | 90 | 15 | 6.7 | 0.9 | 0.3 | 0.03 |
| 10 | 82 | 13 | 5.6 | 0.8 | 0.2 | 0.02 |

### 3.2.3 CHANGE OVER STATE

The change over state is the stage in charge of controlling the switching of the relays. It has a linear power supply controlling a single relay switch which in turn controls the output voltage switching of both the charger and the oscillator stages. In the presence of power from NEPA, the relay becomes energized. The contacts may make or break depending on their connection. The change over circuit is shown below;

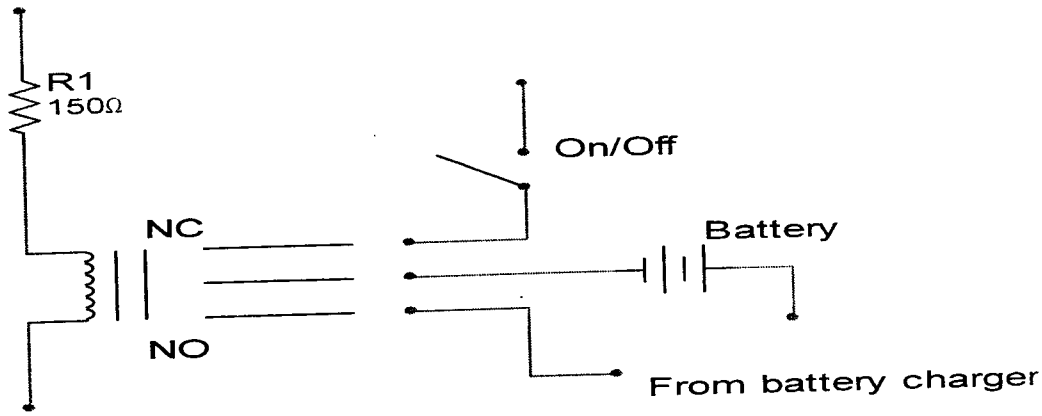


FIG. 3.4 THE CHANGE OVER STATE

The relay was powered from the smoothened 15.6V DC via resistor. The relay has a coil resistance of 100Ω with a 6V coil voltage.

The coil current was calculated using;

$I = V / R$

$I = 6 / 100$

$I = 60mA$

Operated on a 15.6V, the value of the current limiting resistor was;

$Rs = (15.6 - 6) / 0.06$

$Rs = 9.6 / 0.06$

$Rs = 160\Omega$, but the value of $180\Omega$ was used instead.

When the supply from the mains is present, current flowing through the coil causes the battery to be transferred to the battery charger output where the battery is recharged.

A power-on-indicator was provided across the rectifier output to indicate the presence of AC mains. The LED was powered via a current limiting resistor of value calculated from;

$Rs = (V_S - V_{LED}) / I_{LED}$

$V_S = 15.6V$; $V_{LED} = 1.7V$ $I_{LED} = 5mA - 20mA$

using the minimum LED current;

$Rs = (15.6 - 1.7) / 0.005$

$Rs = 2780\Omega$

Using the maximum LED current;

$Rs = (15.6 - 1.7) / 0.02$

$Rs = 695\Omega$, but however, the value of $1000\Omega$ was used.

## 3.3 ROYER CONVERTER (RESONANT OSCILLATOR)

To keep size low, a high frequency resonant inverter was used to produce a high voltage AC output from the 6V DC battery voltage. The oscillator uses a ferrite core transformer since the higher the frequency the smaller the transformer core size. The inverter is shown below.

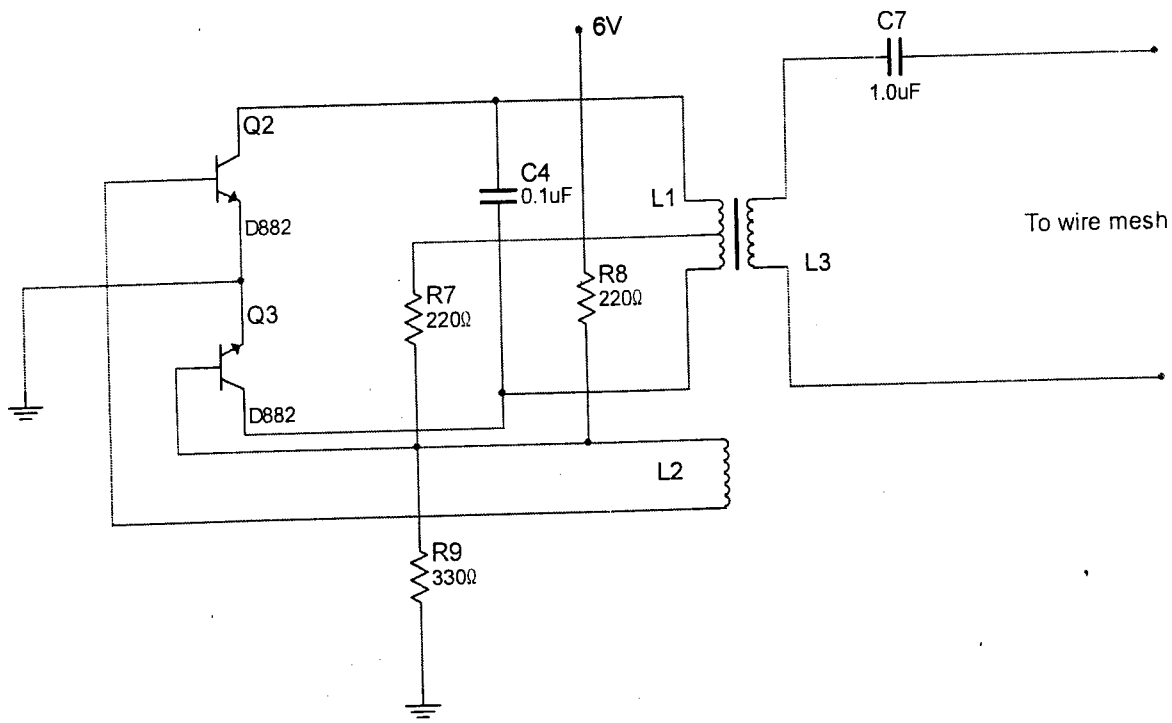


FIG 3.5 HIGH FREQUENCY RESONANT INVERTER

It was configured as a push pull self driven LC oscillator with a sinusoidal output. L1 and C1 from an LC tank circuit into which Q2 and Q3 work. The C1 was 0.1μF capacitance. The transformer T2 was designed for 25kHz operations.

Using $F = 1 / 2\pi\sqrt{LC}$

$F = 1 / 4\Pi^2LC$

$L = 1 / 4\Pi^2F^2C$

$L = 1/ (4\Pi^2) . 25000^2 \cdot 10^{-7}$

Due to the asymmetrical nature of the biasing arrangement, Q2 start up earlier than Q3, causing oscillatory current to flow through L1. L2 is an out-of-phase (OOP) feedback winding. The feedback current is such as to cause Q2 to cut-off and Q3 to start conducting, giving rise to a push pull operation.

The 12V AC voltage across L1 is stepped up to about 1000V by the voltage transformation ratio of L1:L2. The high voltage potential appears across L3, the output winding. The output voltage was applied to a metal grid composed of two wire gauzes. The gauzes were both connected to the two ends of the output winding L3.

### 3.3.1 THE INSECT EXTERMINATOR CIRCUIT

The circuit comprises basically of an ultraviolet fluorescent lamp, a voltage grid combination and a voltage multiplier circuit.

The ultraviolet lamp functions as a luring light which attracts the insects as explained earlier. The fluorescent lamp has a power rating 4 – 40 watts range. Two fluorescent tubes, each having a power rating of 10 watts were used in the construction of this project.

The representation of the exterminator circuit is shown below.

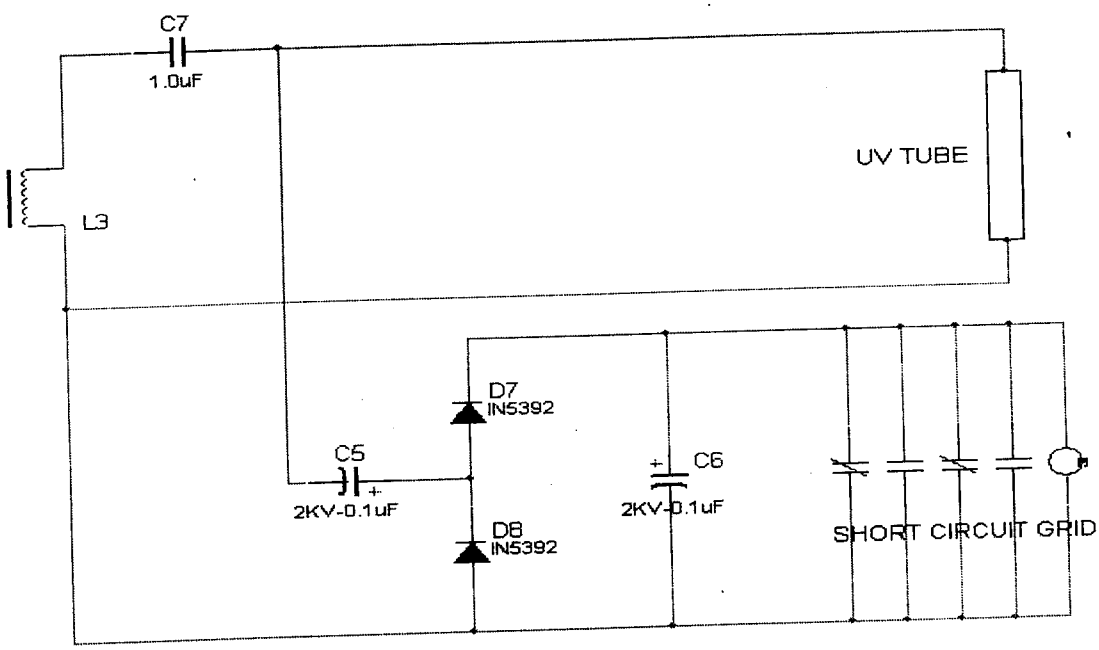


FIG 3.6 THE EXTERMINATOR CIRCUIT

The insect to be exterminated is drawn to the white-bluish glow of the ultraviolet bulb. The insect is then trapped between the two wire gauzes. Due to the small spacing the gauzes, the insect causes a short circuit, forming a path through which current flows, causing instant electrocution and thereby killed the insects.

### 3.3.2 THE ULTRAVIOLET FLOURESCENT LAMP

This is an electrical lamp which emits ultraviolet light. Illumination is produced on the inside of the fluorescent casing of the glass tube when voltage is applied across it. Each lamp has a power rating of 10 watts and its function is to lure the surrounding insects to the device so they can be exterminated. The tube voltage rating of the lamp is 240V.

### 3.3.3 THE VOLTAGE GRID DESIGN AND ARRANGEMENT

The voltage grid surrounds the device and encloses the fluorescent lamps. The grid is such that the space of each grid unit grid square is so small as to prevent the insect from actually getting inside the grid to the fluorescent lamp. This is important because the insects have to be killed on contact with any part of the voltage grid.

The insects are killed by means of a short circuit spark. Since a short circuit spark is needed, two grids were used; one connected to the lower 230V and the other, connected

to the high tension voltage. Thus a bridge between these two plates would result in a spark. For safety reasons, the grid was designed to operate at a low current. Also, the high and low tension are spaced enough to prevent 'Corona Discharge' and at the same time small enough for any insect to bridge.

# CHAPTER FOUR

# DESIGN ANALYSIS AND DISCUSSION

The design analysis is taken on a stage by stage basis. Therefore, the battery used in this project is the lead-acid battery. The fixed float voltage, which is required to maintain the charge on the battery indefinitely lies between 6.2 – 8.2V. A higher value is preferred than a lower one because we require a faster charging rate especially under the condition that the frequency of the charge and discharge is high.

In order to generate the voltage (12 – 15)V, a variable power supply designed to use a variable regulator will be used. The variable power supply can supply a current up to a maximum of 1.05A over a range of 1.2 – 8.2V output. The output is determined by external resistor controlling an internal circuit amplifier.

The variable power supply regulator used is the LM317T of 3-terminal adjustable regulator. It has an excellent line voltage (0.01%) and load (0.1%) regulation and ripple rejection of 8dB. It also has a full wave over-load protection. This regulator is very reliable and practically fail-safe because its output is automatically limited to a safe value.

The operation of the battery charger circuit can be described as follows. The device develops a nominal reference voltage ($V_{ref}$) of 1.25V between the output and the adjustment terminal. The reference voltage is across $R_3$ and since the voltage is constant,

then a constant current I, flows through the output set resistor $R_4$, this gives an output voltage which is equal to;

$V_{out} = V_{ref}(1 + R_4/R_3) + I_{adj}R_4$

Choosing values for resistor $R_3$ to be 1.2Ω, the current becomes;

$I_{adj} = V_{ref} / R_3$

$= \quad 1.25 / 1.2$

$= \quad 1.04mA$

$V_{out} = 8.2V$

To obtain the value of $R_4$, we use the equation

$V_{out} = V_{ref}(1 + R_4 / R_3) + I_{adj}R_4$

$8.2V = 1.25V\ (1 + R_4 / R_3) + 1.04 \times 10^{-3} \times R_4$

$8.2 = 1.04(1.2 = R_4) + 1.04 \times 10^{-3} \times R_4$

$8.2 = 1.25 + 1.04R_4 + 1.04 \times 10^{-3} \times R_4$

$6.95 = 1.04R_4$

$R_4 = 668\Omega.$

This is the resistance to give the exact charging voltage to the battery. But, however, this is not a standard value, therefore, a 1000Ω variable resistor was employed. The battery used in the design is a 4.5Ah sealed lead-acid battery.

For a charging current of 1.05A, the charging rate has to be at a rate of 20%. That is, the transformer used has a current rating of 0.5A. Using this battery does not give the problem of over charging since it is a constant voltage type. This battery charges exponentially.

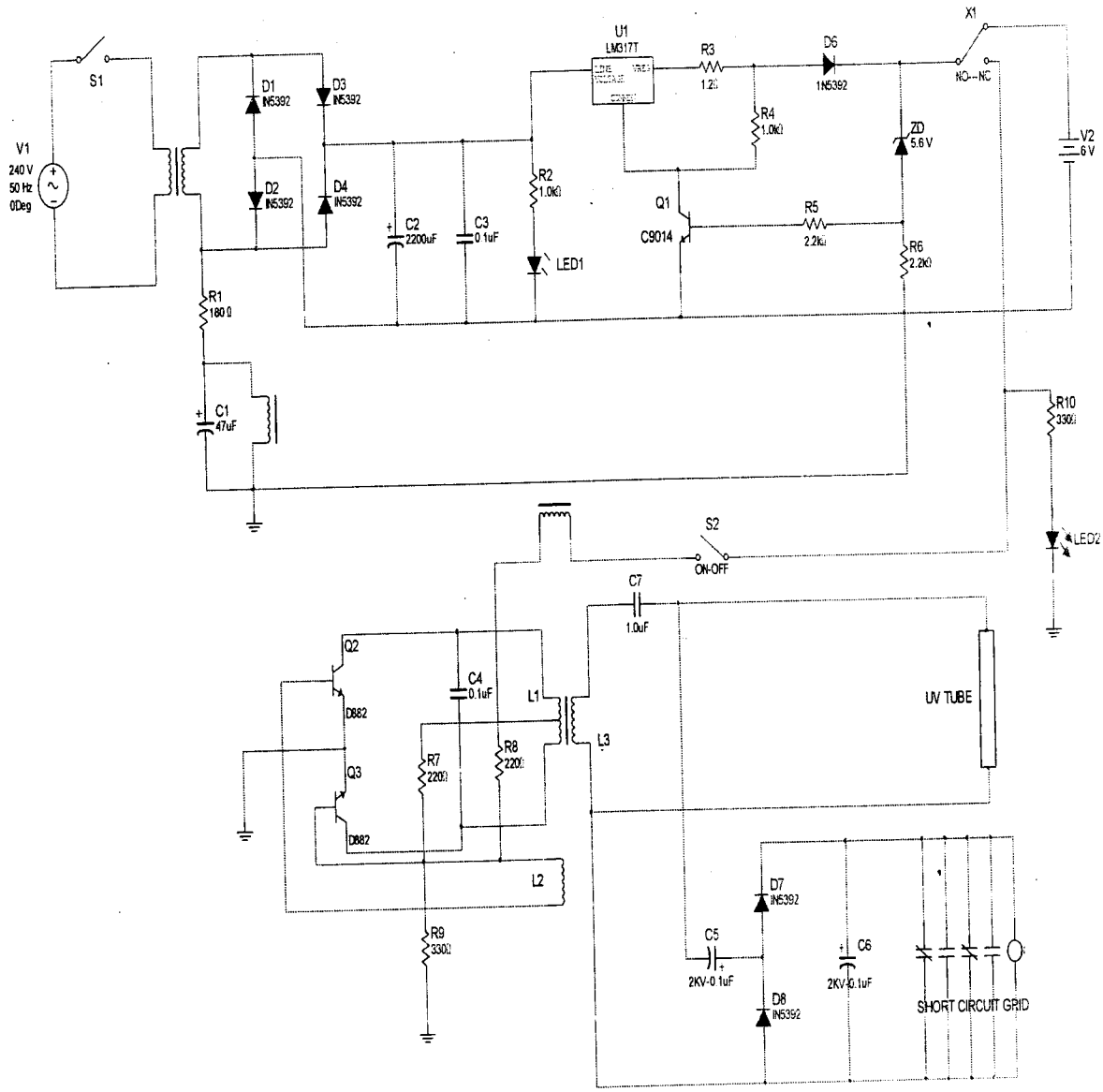


Fig. 4.0 COMPREHENSIVE CIRCUIT DIGRAM OF THE PROJECT

# CHAPTER FIVE

# CONCLUSION AND RECOMMENDATION

As observed from chapter one to chapter four, the construction of this project was carried out on a stage by stage basis. Every stage involved its own testing to achieve desired results. All the waveforms especially in the oscillator and driver stages were confirmed using an oscilloscope. At the battery and charger stage, the desired 8.2V required to charge the battery and supply a current up to a maximum of 1.5A over a range of 1.2 – 8.2V output. The driver stage, oscillator and the change over stage conformed to the design analysis as well. The voltage outputs were tested with the aid of voltmeters.

After all the stage-by-stage testing was completed, all circuit connections were done carefully and rechecked. All the necessary component connections were soldered carefully and unwanted lead fragments were remove using a sucker.

At the end of the construction, the circuit was placed firmly in a plastic casing. The lamps and the voltage grid were also put in place after which a grid protector was used to cover each side of the voltage grid.

# REFERENCES


1. B. L. Theraja, A. K. Theraja *"A Textbook of Electrical EngineeringTechnology"* 1993.(pp. 357, 358, 363, 2088, 2112, 2130 – 2141, 2296, 2299)
2. www.abcpest.com/houston/pest/index.shtml
3. Milton Kanfmand and Arthur H. Seiman *"A Hanbook for Electronics Engineering Technicians"* 1999. (pp. 412, 565, 568)
4. www.howstuffworks.com
5. Clement & Johnson *"Electrical Engineering Science"* McGraw Hill Ltd. 1973.
6. David J. Mauro & N. S. Widmer *"The Biology of Living Things"* Eight Edition 1991; Prentice Hall, India. (pp. 29, 86, 112 – 136)
7. Microsoft Encarta Premium Suite 2008
8. J. Millman – Halkias C. C. *"Integrated Electronics: Analog and Digital Circuits and Systems"* McGraw-Hill Kogakusha Ltd, Tokyo. 1972. (pp. 523, 767, 1045)
9. www.pestcontrol.com
10. P. Sylvester *"Electrical Circuits and Systems"* Macmillan Press Ltd, London 2001.(pp. 65, 123, 125, 165)
11. H. Belove *"Digital and Analogue Systems, Circuits and Devices"* McGraw-Hill Ltd, Tokyo 1976. (pp. 65)
12. F. H. Mitchell Jr. and F. H. Mitchell Sr. *"Introduction to Electronics Design"* 2nd Edition, Prentice Hall, New Jersey 1992. (pp. 78, 142)

13. David J. Comer *"Modern Electronic Circuit Design"* Addison Wesley Publishing Company, Massachusetts 1976. (pp. 91, 108 – 126, 312)

14. Harrison Higgins *"Environmental Biology"* 4th Edition, Prentice Hall Inc. New Jersey 1983. (pp. 56, 82, 89, 109, 276, 284 – 315, 479)

15. Robert Mauro *"Engineering Electronics: A practical approach"* Prentice Hall New Jersey 1989.

16. Savant Roden Carpenter *"Electronic Design: Circuits and Systems"* 2nd Edition Benjamin/Cummings Ltd. 1991. (pp. 45)

17. Fitzgerald, Higginbotham, Grahel *"Basic Electrical Engineering"* 5th Edition McGraw Book Company 1973. (pp. 64, 89)

18. V. A.Suprynowicz *"Electrical and Electronics Fundamentals"* West Publishing Company 1987. (pp. 54, 63, 93)

19. Johnson/Johnson/Hilburn *"Electric Circuit Analysis"* 2nd Edition Prentice Hall 1992. (pp. 108, 146, 186)