DESIGN AND CONSTRUCTION OF A DIGITAL COUNTER.

BY

JEBI SIMON Y.
2003/15388EE

DEPARTMENT OF ELECTRICAL AND COMPUTER ENGINEERING,
FEDERAL UNIVERSITY OF TECHNOLOGY
MINNA,
NIGER STATE.

NOVEMBER, 2008.

DESIGN AND CONSTRUCTION OF A DIGITAL COUNTER.

BY

JEBI SIMON Y.

2003/15388EE

A THESIS SUBMITTED TO THE DEPARTMENT OF ELECTRICAL AND COMPUTER ENGINEERING, FEDERAL UNIVERSITY OF YECHNOLOGY, MINNA, IN PARTIAL FULFILLMENT OF THE REQUIREMENT FOR THE AWARD OF B.ENG. DEGREE.

NOVEMBER, 2008.

DEDICATION

This project is dedicated to God Almighty in Christ Jesus my lord.

DECLARATION

I, Jebi Simon Yashim, declare that this work was done by me and has never being presented for the award of a degree. I also, hereby, relinquish the copyright to the Federal University of Technology, Minna.

Jebi Simon Y.

Name of student

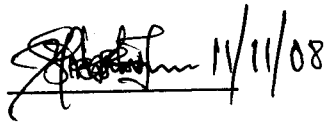

Signature and Date

Mr. J. G. Ambafi.

Name of supervisor

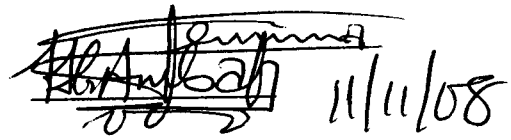

Signature and Date

Dr. Y. A. Adediran

Name of H.O.D

Signature and Date

Name of External Examiner

Signature and Date

ACKNOWLEDGEMENT

My uttermost gratitude goes to God Almighty, in Jesus name. My sincere appreciation to my parents, late Mr. Stephen I. Jebi, and Mrs. Sarah Jebi. Your labour of love will never be in vain.

My unreserved gratitude also goes to all the lecturers of the department including the H.O.D, Engr. Dr. Y. A. Adediran. My special thanks to my supervisor, Mr. James A. Ambafi.

Finally, my appreciation to my friends and colleagues who have contributed in one way or the other to the successful completion of this project among whom are Onyevu Osinaka Rapheal and Chris. God bless you all.

ABSTRACT

This project is a report on the design and construction of a digital counter device, counting the number of people to be accommodated in an enclosure to avoid inconveniences make available comfort for a target audience with respect to number. It can be used in banks, supermarkets, museums and buses to help monitor population. The number of people that have used a particular passage can also be known.

The project is realized with the use of digital electronic circuits comprising of digital ICs and optoelectronic circuits. The use of this device is restricted to only one passage for either entry or exit under the supervision of a trained staff.

Counting is done when the opto-electronic unit of the device is interrupted by a person moving across the IR setup. The number of people that have crossed that passage is displayed at the seven-segment display outputs. The maximum count is 999, after which the counter resets to 000, starting all over again.

TABLE OF CONTENTS

Dedication ii

Declaration iii

Acknowledgement iv

Abstract v

Table of Contents ..... vi-vii

List of figures viii

List of tables ix

CHAPTER ONE:

1.1 Introduction 1-2

1.2 Aim and Objectives 3

1.3 Scope of Work 3

1.4 Methodology 3-4

1.5 Limitations of the project 4

CHAPTER TWO: LITERATURE REVIEW/THEORETICAL BACKGROUND.

2.1 Historical Background 5-9

2.2 Review of Past Works 9-10

2.3 Theoretical Background 11-21

2.3.1 Counters 13

2.3.2 Block Diagram of Design 13-21

2.3.2.1 Power Supply Unit (PSU) 14-16

2.3.2.2 Opto-Electronic Unit (OEU) 16-17

2.3.2.3 Logic Control Unit (LCU) 18-20

2.3.2.4 Display Unit (DU) 21

CHAPTER THREE: DESIGN AND IMPLEMENTATION.

3.1 Power Supply Circuit 22-24

3.2 Opto-Electronic Circuit 24-27

3.3 Logic Control Circuit 27-28

3.4 Display Circuit 29

CHAPTER FOUR: CONSTRUCTION, TEST AND DISCUSSION.

4.1 Circuit Construction 31

4.2 Case Construction 31

4.3 Testing 31-32

4.4 Observation 32-33

CHAPTER FIVE: CONCLUSION AND RECOMMENDATION.

5.1 Conclusion 34

5.2 Problems encountered..... 34

5.3 Recommendation..... 35

REFERENCES 36-37

APPENDIX 38

LIST OF FIGURES

Figure 2.1 Block diagram of the digital counter..... 14

Figure 2.2 Power supply unit (PSU) 14

Figure 2.3 Power supply signal waveforms..... 16

Figure 2.4 An astable multivibrator and its rectangular output waveform.....17

Figure 2.5 A monostable multivibrator using 555 timer IC..... 18

Figure 2.6 Pin layout of a 74LS47 BCD-to-seven-seven decoder/driver IC..... 20

Figure 2.7 Seven-segment (common-anode) display IC..... 21

Figure 3.1 Power supply circuit diagram..... 22

Figure 3.2 Opto-electronic circuit..... 24

Figure 3.3 Transistor circuit 25

Figure 3.4 Logic control circuit..... 28

Figure 3.5 Display circuit..... 29

Figure 3.6 The complete digital counter circuit diagram..... 30

LIST OF TABLES

Table 2.1 Truth table of a JK Flip-flop..... 12

Table 2.2 Table showing the characteristics of the transistors used..... 17

Table 3.1 Table showing the counter's inputs and outputs..... 29

Table 4.1 Results test table..... .32

CHAPTER ONE

1.0 Introduction.

The discovery of electronics is significantly appreciated in the development of digital electronics counter. From the development of valves (vacuum tubes) in the early 1900s to transistors and integrated circuits (ICs) in the 1960s and other electronic devices or components including computers, man has been in search of various means of achieving stressful jobs with better efficiency and effectiveness using cheaper but available materials with relevant ideas.

One of the basic requirements in most electronic equipment is counting which is dependent on time or event or both, as in the case of real time computing for time synchronization with a real time control facility for continuous monitoring and simulation. Counters could be clock–based, sensor or event–based or even interactive–based (where the relationship between action or event and the counter system is much loosely defined). Counters are required in various circumstances for various reasons and available counting ranges. For example, a simple digital clock requires a decimal counter for the unit position of seconds and minutes, but must count only from zero (0) to five (5), that is, modulo six (6) for the tens position of seconds and minutes.

The relevance of counters in many applications can not be overemphasized so much that many different kinds of counter ICs have been designed for both Transistor-Transistor logic (TTL) and Complementary Metal Oxide (CMOS) logic families. Some count up for clocks and time intervals, while others count down to show time remaining until some events occur. Some are particularly designed to count in decimal mode, while others count in binary

mode but, a good number still have selectable counting ranges. The list of capabilities and options is quite large, leaving the circuit designer with only the task of selecting the particular IC that best suits the need.

Generally, a counter is a counting device that stores and displays (not in all cases) the number of times a particular event or process has occurred, often in relation with a clock signal. Practically, this could be achieved with the use of either an up counter or a down counter or even both.

In Nigeria today, and the Federal University of Technology Minna, in particular, digital counter could be used at the examination centre, conference centre, internet cafe and cafeteria, curbing the problem of overcrowding as well as the problem of overloading of the school buses with passengers. This enables better planning strategies and hence, better management performance. This project involves the use a digital counting device with a well organized human traffic. It is meant to count the number of people passing through a particular point, using an application of infrared (IR) beam of light. The device monitors movement in any direction across the light beam resulting into a count up, indicated at the display.

However, there is need for a human supervision, say a learned security staff, who could supervise the counting process to prevent error count. The expected number of people required in an enclosed area (a room, hall, bus, among others) with one entrance and one exit points for a particular purpose could be known or rightly predicted with a high degree of certainty. This promotes an unflinching focus towards achieving the purpose within a set period

1.1 Aims and Objectives

This project is the design and construction of a digital counter device to count the number of people that are required in an enclosed area for a particular purpose. The primary aim of the project is to detect and count the number of people passing through a particular point into an enclosed area say, examination centre, conference halls, internet cafe, cafeteria and bus, among others. This is intended to aid better planning strategies of events or purpose to curb for instance, the problem of overcrowding of FUT Minna examination centre with candidates and/or overloading of FUT Minna buses with passengers.

1.2 Scope of Work

The following include the area of coverage of this project:

- Digital electronics using Integrated Circuits.
- Power supply system.
- Remote control system.
- Relaxation oscillators.
- Amplifiers using transistors.
- Power electronics, using diodes, resistors, and capacitors.

1.3 Methodology

The set of methods and principles used to achieve the project can be referred to as the bottom-up methodology. This is so as to obtain reuse-ability of the design, making use of the predefined modules. An entry or exit passage of an enclosure was considered. Counting is to

be done in one direction to only under supervision to eliminate double count. A remote control system was setup in such a way that a pulse is counted only when the system is interrupted by a person passing across it. This is aided by the use of a two dissimilar direct-coupled transistors for switching. Event control with respect to time, logic processing and code conversion were also employed to achieve the set objectives.

1.4 Limitations of the project.

- The counter can not count more than 999.
- It does not determine the direction of motion.
- Requires the services of a trained supervisor does not technically discourage double count

CHAPTER TWO

2.0 Literature review/Theoritical background.

2.1 Historical Background.

To really appreciate the electronic counter today, the knowledge of the evolution of counting is necessary. Although numbers are inevitably specified in counting, numerals were not in existence in the early times. Man actually was the first counter that existed and his hands and fingers were the earliest counting device. From man's experience of small basic counting he discovered that the quantity of things he needed to count increased, greater than the total ten human fingers and ten toes could represent. So, man employed various natural items like stones (or pebbles) and twigs to help in counting. Merchants who traded goods not only needed a way to count goods they bought and sold, but also to calculate the cost of the goods. Until numbers were invented archaic counting devices were employed to make every day calculations. One of the earliest formal counting devices is the ABACUS, which is also used in elementary calculations (arithmetic).

The abacus emerges in the first millennium BC. This method of calculations – originally simple furrows drawn on the ground, in which pebbles could be placed – is believed to have been used by the Babylonians and Phoenicians from perhaps as early as 1000BC. The picture above shows a modern abacus. In ancient times, the abacus was more properly known as counting boards, as they were very, very different then [1]. The original counting boards were made of wood, stone or metal, and had groves between which beads or pebbles were moved. The oldest surviving counting board is the salamis tablet (originally thought to be a gaming board), used by the Babylonian Circa 300BC, discovered in 1846 on

the island of Salamis. It is a slab of white marble measuring 149cm in length, 75cm in width and 4.5cm thick, on which are five groups of markings [2]. The abacus is an ingenious counting device bused on the relative positions of two sets of beads moving on parallel strings. The first set contains five beads on each string and allows counting from 1 to 5, while the second set has only two beads per rising representing the numbers 5 and 10. Abacus system seems to be based on a radix of five. Using a radix of five makes sense, since man started counting objects on their fingers [3]

Soon after language developed, it was safe to assume that man began counting and fingers and thumbs provided natural abacus. The decimal system is no accident. Ten has been the basis of most counting systems in history. When any sort of record is needed, notches in a stick or stone are the natural solution. In the earliest surviving traces of a counting system, numbers are built up with a repeated sign for each group of '10' followed by another repeated sign for '1'. In Egypt, from about 3000 BC, records survive in which '1' is represented by a small vertical line ('|') and '0' as '^'.The Egyptians write from right to left, so that number '23' becomes 'III^^'. While in 1700 BC the Babylonians used a numerical system with '60' as its base. This is extremely unwieldy, since it should logically require a different sign for every number up to '59' (just as the decimal system does for every number up to nine). Instead, numbers below sixty were expressed in clusters of ten, making the written figure awkward for any arithmetic computation. The Roman numerals were used from the third century BC.

Another interesting invention is the Napier's Bones, a clever multiplier tool invented in 1617 by mathematician John Napier (1550 – 1617) of Scotland. The bones are asset of vertical rectangular rods, each one divided into ten squares. The top square contains a digit

and the remaining squares contain the first nine multiples of digit. Each multiple has its digits separated by a diagonal line [4]. When a number is constructed by arranging side by side the rods with the corresponding digits on the top, then its multiple can be easily obtained by reading the corresponding row of multiples from left to right, while adding the digits found in the parallelograms formed by the diagonal lines. No wonder John Napier was also the inventor of the logarithms a concept used to change multiplication into addition [5].

To 'compute' from the word 'calculate' implies performance of operations, such as addition, subtraction, multiplication and division. In the 18th century, a mechanical way of multiplying and dividing was invented which lead to the invention of the SLIDE RULE and the LOGARITHM TABLES. The first calculating machine appeared in 1820. The machine uses a series of ten toothed gear wheels. The first analogue computer was built in 1930. This device was used in World War II to help aim targets. The first digital computer was completed in1946 by IBM [6]. It is of necessity to note that the earliest calculating machines were built by gifted mathematicians moved by an intense desire to simplify the repetitive nature of arithmetical operations. The first known adding machine was made by Wilhelm Schickard (1592 -1635). In 1623 Schickard, a polymath and then professor at the university of Tubingen in Wuerttemberg, now part of Germany, designed and constructed a mechanical device which he called the 'calculating clock'. Able to add and subtract up to six digit numbers, the artifact was based on the movement of six dented wheels geared through a 'mutilated wheel', which with every full turn allowed the wheel located at the right to rotate 1/10th of full turn, an over flow mechanism rang a bell. The adding feature was devised to help in performing multiplication with a set of Napier's cylinders included in the upper half

of the machine. According to his notes, a prototype of this machine was destroyed by a fire. It seems that another prototype existed at that time, but it has never been found [7].

Herman Hollerith is widely regarded as the father of modern for storing and processing information and he built the first punched-card, tabulating and sorting machine as well as the first key punch, and he found the company that was to become IBM. Hollerith's designs dominated the computing landscape for almost 100 years [8]. The standard punched-card, originally invented by Herman Hollerith was first used for vital statistical tabulation by the Baltimore Board of Health (BBH). After this trial use, punched-cards were adopted for use in the 1890 census of Columbia. Hollerith was not working in a vacuum, as his idea for using punched-cards for data processing came after he had seen the punched-cards used to control Jacquard Looms [9]. These machines reduced a ten-year job to three months (although some other sources gave different durations, it ranges between six weeks and three years, depending on the intensity of the task). It also saved the 1890 tax payers five million dollars, and in turn earned Hollerith an 1890 Columbia PhD. Hollerith also won the competition by proposing a manual card punch with mechanical counting (tabulating) dials [10].

Speed and accuracy is enhanced when interpreting coded materials by means of electricity. Modern computers use transistors (among other electronic components) that represents two states with either a high (1) or a low (0) depending on whether input or output signals were positive or negative logic). The BIT is the smallest unit of memory for binary states. Bits are arranged in groups called BYTES to aid data processing, and to make the binary numbers shorter and more manageable for man. Now, these bytes are sized in multiples of four. Thus base 16 (hexadecimal) is commonly used as short hand. Base 8

(octal) has also been used for the same purpose [11]. Hence, the binary equivalence of 1, 2, 3, 4, 5, 6, 7, 8, 9 and 10 are 1, 10, 11, 100, 101, 110, 111, 1000, 1001 and 1010, respectively. These codes are applicable to digital decade counter circuits.

Counting applications allow digital monitoring, numbering, recording and control of things, including people as in the case of this project. In addition to the development of binary designations, more and more logic families of ICs are designed for various counting operations. They can be interfaced with a computer for easy-to-use applications or certain related inbuilt systems which tremendously reduces the cost of counting applications.

2.2 Review of Past Works

So much has been done in digital counter applications using various basic electronics circuits particularly in this area of application under study.

Digital toll gate counter – where the actual number of cars that use the federal roads over a specified period of time is obtained aiding the government's accounting department to validate the actual figure of the number of cars that used the toll gate with the income generated over a set period – which advantage is to ensure that funds do not go unaccounted for and the activities of the toll gate officers are better monitored thereby, sanitizing this important aspect of government's income generation.

Assembly line counter – usually applied in most manufacturing industries, in which product items are orderly counted as they are rolled along a conveyor belt usually across a sensing unit (pressure or Light sensing setup).

A theatre population monitoring system – designed to give information about the number of persons seated within the hall during a film show to know whether the theatre is

full or not – this employs the use of up/down counter in which increment count is obtained when switches (located under the seats) are stepped upon or pressed down, while decrement count is obtained when the switches are released (different from their original positions). Although this application involves detail technicalities, a light sensing setup could also be used.

An automatic room light-switch in which, once a person enters the room and the circuit registers a count, it enables the light. While if the person leaves the room the counter would cause the light to switch off.

Another application is in a hall with an entrance and an exit. Here, the counter setup is positioned at the entry and exit, one for each. Hence, the number of persons that used the hall could be easily known. This application is our area of concern in this project using light sensing setup in the design and construction of the device, with thorough consideration of one of the two passages, since the same counter device is used for both.

Finally, an automatic room population monitor is another application where the counter device is restricted to one door for both entry and exit, with detail modifications. The design logically discourages error count, without much supervision.

This design therefore would be well appreciated at the sensing and control setup. However, it requires a pre-count preparation before its operation.

2.3 Theoretical Background.

Electronic components ranging from simple resistors to small and medium scale integrated circuits (ICs) have been soldered together to achieve the aim of this project. A good knowledge of the basic operating principles of these components would be necessary for better understanding about the configuration adopted in this project as would be clearly discussed in chapter three.

In digital electronics, logic circuits are classified into combinational circuits which involves the use of logical gates like AND, OR and NOT, among others (with no memory) and sequential circuits which include devices with memory like the flip-flop. The sequential circuits involve the use of timing and memory devices. This really makes the digital world an interesting one. Gates are the basic building blocks of the combinational circuits, while that of the sequential logic circuits are flip-flop.

The available types of flip-flops are D flip-flops, RS flip-flops and JK flip-flops. The JK flip-flop is considered to be the 'universal' flip-flop, having the feature of all other types of flip-flops. The table below shows the truth table of a JK flip-flop. The data inputs are 'J' and 'K'. Clock pulses are provided by the clock 'CLK'. 'Q' and 'Q' are the customary normal and complimentary outputs, respectively. The flip-flop is in the hold mode when the JK inputs are zero (0), and the data inputs have no effect on the data outputs; hence, the outputs retain the last data inputs.

Table 2.1: Truth Table of a JK Flip-Flop.

OPERATION MODE.	INPUT PULSE.		OUTPUT PULSE		COMENTS ON OUTPUT
			Q	Q̄	
HOLD	0	0	Unchanged	Unchanged	Constant
RESET	0	1	0	1	Resets to zero (0)
SET	1	0	1	0	Sets to one (1)
TOGGLE	1	1	Toggling	Toggling	Alternates between opposite states.

From the truth table, row 2 and 3 shows the reset and set conditions, respectively. Row 4 illustrates the useful toggle position of the JK flip-flop. When both inputs J and K are at '1', the repeated clock pulse causes the output to turn off-on-off-on, and so on. This off-on action is like a toggle switch hence, it is toggling. For wider applications, additional inputs 'PS' and 'CFR' could be added to give an asynchronous input. Asynchronous inputs which override the synchronous inputs are active in the first three rows of the truth table above. Therefore, it is interesting to note that this simple device forms the basis of most counting circuits.

2.3.1 Counter.

All complex digital systems contain several counters. A counter's job is the obvious one of counting events or period of times or putting events into sequence. Counters also do some not so obvious jobs like dividing frequency, addressing and serving as memory units. Hence, a counter is a digital circuit that consists of 'n' number of flip-flops connected in cascade whose function is to count the number of pulses applied to its input terminals.

The counter use is the 74LS90 decade counter chosen from a large variety of counters. These counters count in tens rather than having a binary representation. Each output will go high in turn, starting over again after ten outputs have occurred (0 – 9). This type of circuits finds application in multiplexers and de-multiplexers and wherever a scanning type of behavior is required. Similar counters with different number of outputs are also available. This counter a high speed monolithic decade counter consisting of four dual-rank master-slave FFs internally interconnected to provide various counting operations.

2.3.2 Block Diagram of Design

The block of the design is given below. It consists of the following units:

1. Power Supply Unit (PSU).
2. Opto-Electronic Unit (OEU).
3. Logic Control Unit (LCU).
4. Display Unit (DU).

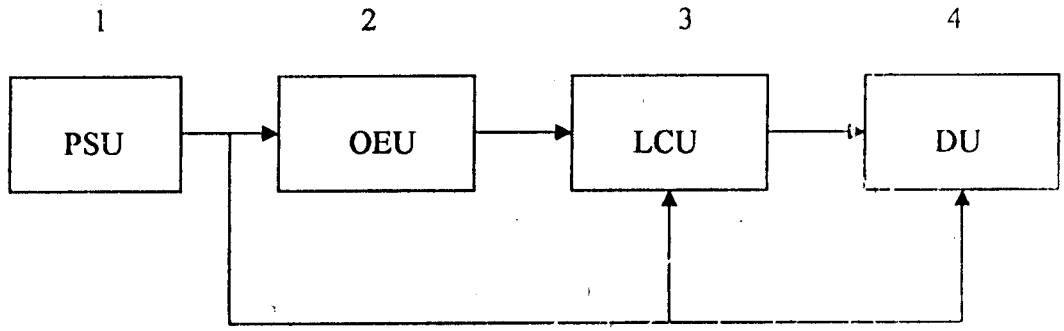

Figure 2.1: Block diagram of the digital counter.

2.3.2.1 Power Supply Unit (PSU).

This unit comprises of 240/9V Ac, 5000mA, 50Hz transformer (step down), a conventional bridge rectifier consisting of four signal diodes ((IN4007), two electrolytic capacitors (1000μF/16V and 220μF/16V), a voltage regulator IC (7805), a resistor (330Ω) and a light emitting diode (LED) as shown in figure 2.2 below. These components combination divides the power supply unit into various sections of analysis which include the AC voltage input, full-wave rectifier circuit, smoothing circuit, voltage regulation and regulated DC voltage output.

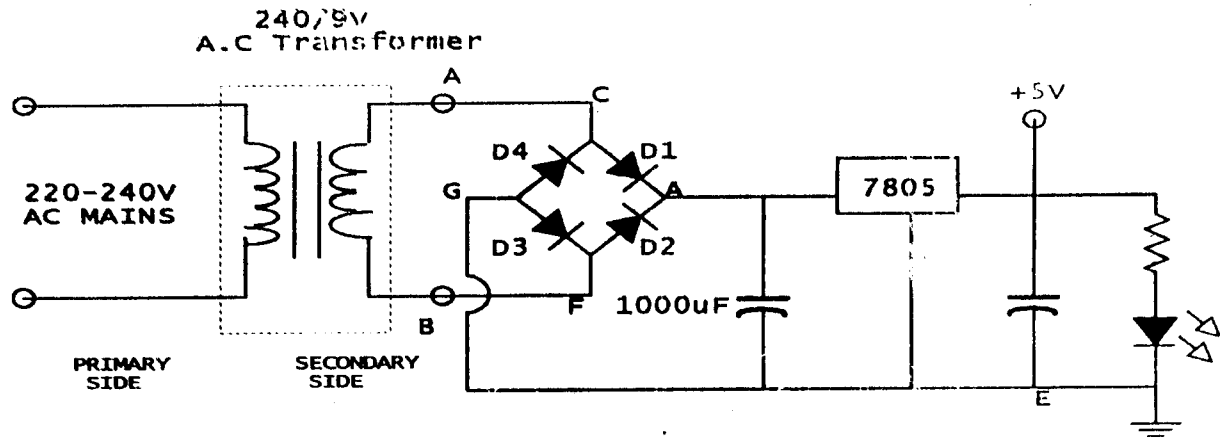

Figure 2.1: Power supply unit (PUS).

The transformer steps down the 220-240V AC main to 9VAC required by the bridge rectifier. The bridge rectifier is the full-wave circuits that avoid the use of centre-tapped transformer, though at the expense of the two additional diodes among the four. In the full-wave rectification, the unregulated 9V AC is converted into a pulsating DC signal. During the positive half-cycle of the input signal, when point A is at a higher potential than point B, diodes D1 and D3 conducts (forward-biased), while D2 and D4 are reverse-biased (cut-off). Hence, the load current flows in the direction ACSEGFBA. During the negative half-cycle when point A is at a lower potential than point B, diodes D2 and D4 now conducts (forward-biased), while diodes D1 and D3 are cut-off (reverse-biased). Hence, the load current flows in the direction BFSEGCAB. This implies that current flows in the direction SE during both half-cycles. Thus the average value (DC) and the output frequency are the same [12].

It is important to note that the regulator IC provides voltage stabilization in the circuit. The capacitors acts or serves as a filtering network or a smoothing circuit to reduce the ripples caused by the pulsation of the rectified signal. The additional 220μF at the output of the PSU circuit is meant to further reduce ripples.

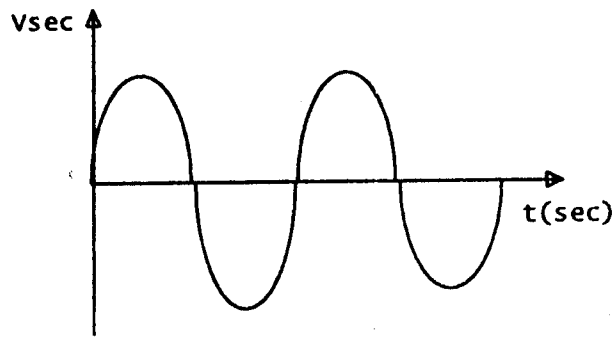

(a)

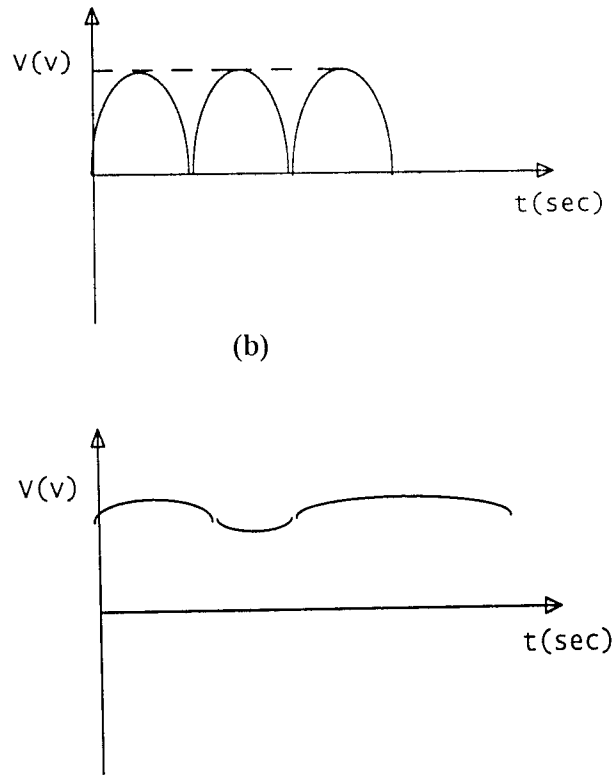

Figure2.2: Power supply signal waveforms; (a) ac input, (b) dc output (c)smoothened dc output.

2.3.2.2: Opto-Electronic Unit (OEU).

This unit involves two well organized infra-red (IR) transmitter and an IR photodiode receiver. The IR transmitter is operated in the forward-biased mode, while the IR receiver is operated in the reverse-biased mode. The transmitter is connected at the output of an astable multivibrator through a transistor (2N2222) which amplifies the astable multivibrator's output to intensify the IR beam. The receiver is connected at the input of two dissimilar direct – coupled transistors in such a way that as long as it receives the invisible light beam (infra-red), it does not trigger on the monostable multivibrator of the logic control unit for a count operation. This means that as long as the direct-coupled transistor output pulse remains

high, the monostable circuit is not triggered. The direct-coupled transistors are meant to detect any change in signal caused by a person moving across the IR setup, hence acts as an oscillator.

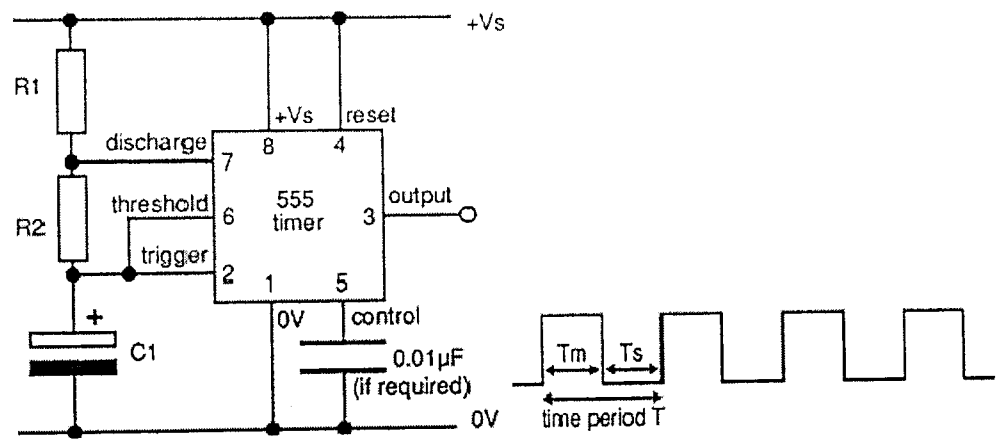

Figure 2.3: An astable multivibrator and its rectangular output waveform.

Table 2.2: Table showing the characteristics of the transistors used (maximum temperature rating = 25°C).

Transistor Type.	Description and Application.	Maximum Collector Current, I_c (A).	Maximum Device Dissipation, P_D (W).	Frequency, f_t (MHz), (minimum).	Current Gain, h_{FE} (minimum).
A1015	PNP-Silicon, audio freq. pwr. Amp.	0.5	0.500	120	100
C1815	NPN-Silicon, Gen. purp. Amp.	0.4	0.6	200	120

2.3.2.3: Logic Control Unit (LCU).

This unit comprises of three circuits – a monostable multivibrator, a decade counter and a decoder. The function of each of these circuits is relatively dependent on one another, with input voltage of +5V dc each.

In the monostable multivibrator circuit, the resistor-capacitor (RC) combination determines the time interval (frequency) of its output signal and the count operation as a whole.

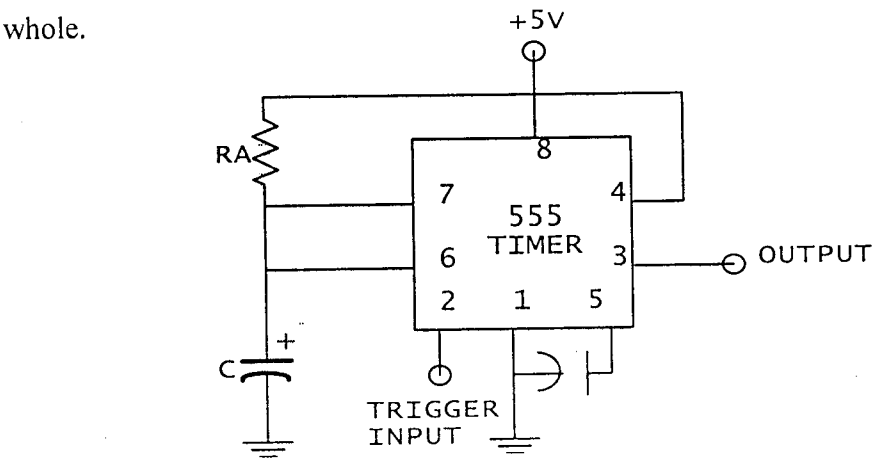

(a)

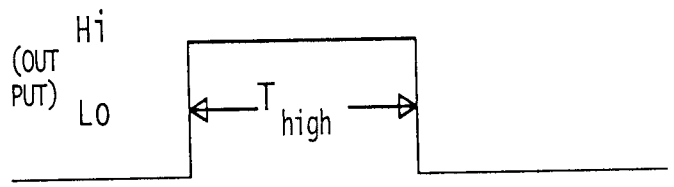

(b)

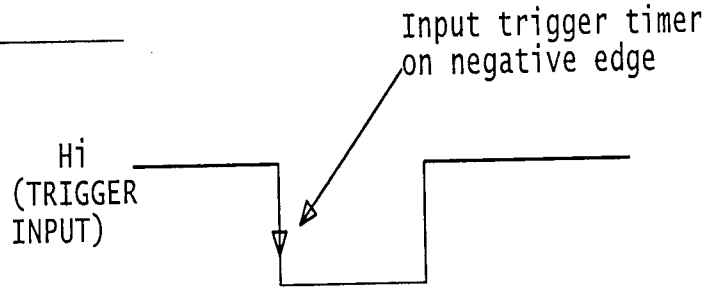

(b)

Figure 2.4: (a) A monostable (one-shot) multivibrator using 555 timer IC, (b) trigger input waveform (c) output waveform.

In monostable operation, when the trigger input signal from the direct-coupled transistors goes negative (active low), it triggers the one-shot, with output at pin 3 then going high for a time period given by the equations:

$T_{(high)} = 1.1\ RC$.

$f = 1/T_{(high)}$

The 74LS90 decoder counter IC which is a high speed monolithic 0-to- 9 counter consisting of four dual-tank master-slave flip-flops internally interconnected to provide a divide-by-ten counting operation, processes the monostable circuit output pulse. The 74LS90 circuit is negative-edge triggered. It can also be used for various other counting operations, too. The pin layout is shown in figure 2.5 below. From the pin layout, it is obvious that the IC has two clock inputs A and B, and outputs are QA, QB, QC and QD. The IC also has four reset leads, R0(1), R0(2), R9(1) and R9(2). When R0 leads are logic 1 (high) together with the counter output resets to decimal zero (0), that is, QDQCQBQA = 0000.

On the other hand, making R9 leads logic 1 (high) causes the output to reset to decimal nine (9) that is, QDQCQQBQA = 1001. These leads can be used to change the count sequence [14]

The 74LS47 BCD-to-seven-segment decoder/driver IC is used to drive seven-segment display. The outputs are buffed to a voltage rating of +5V and current of 20mA to enable it drive a LED display directly. Figure 2.6 below shows the pin layout of the IC. From the diagram, the decoder has four inputs A, B, C and D, where D is the most significant bit (MSB). There are seven output leads marked 'a', 'b', 'c', 'd', 'e', 'f' and 'g'. The IC contains three control leads RB1 (ripple blanking input), RB0 (ripple blanking output) and LT (lamp

test). This IC is designed to drive the seven-segment display (common-anode). To drive the common-cathode seven-segment display, the outputs must be inverted [14].

A decoder provides an output for a specific input combination. This is a form of multiplexer circuit. With four variable inputs, there are sixteen possible binary input combinations. The BCD decoder/driver converts the four input binary codes from the 74LS90 decade counter into a decimal output. The driver drives current for the seven-segment display and also decodes the four bit BCD input codes into the seven output that required to light all of the segments of the seven-segment LED chip. This is achieved by establishing the positional weight of each LED to indicate the required number. Hence, this circuit enables the display of the real decimal character required, thereby eliminating the confusion about which input position is the least significant bit (LSB) [15].

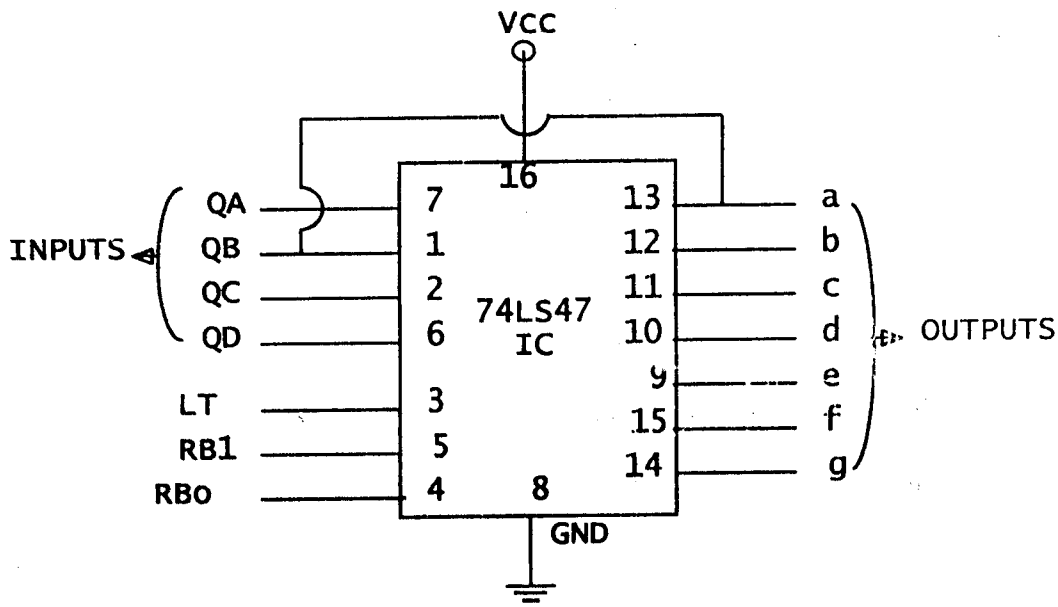

Figure 2.6.: Pin layout of a 74LS47 BCD-to-seven-segment decoder/driver IC.

2.3.2.4: Display Unit (Du):

This unit displays the real decimal characters that are required for any count operation. The common-anode seven-segment display makes up this unit. It reads out in the number system in which we are most familiar. The common-anode seven-segment display has all its LED anodes tied together to Vcc (+5V) of the IC through a current limiting resistor (220) and ground is used to light up the individual segments shown in figure 3.3.4 below. The seven-segment display IC with ten leads consist of seven rectangular LEDs arranged in such a way that it can form the digits ranging from zero (0) to nine (9). The seven LEDs are labeled 'a' to 'g'. Each of these segments is controlled through one of the display LED.

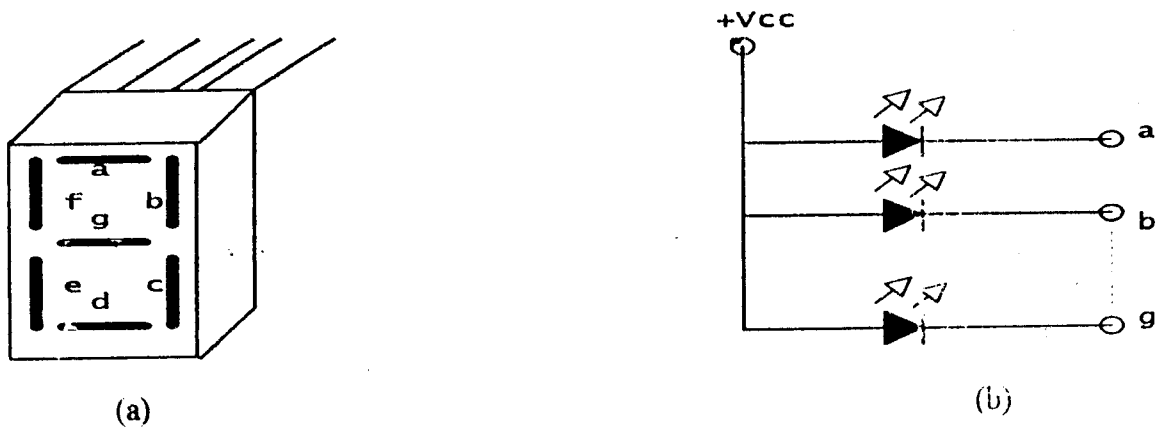

Figure 2.7: (a) Seven-segment display IC, (b) Seven LEDs with their anodes connected together to a common supply.

CHAPTER THREE

3.0 DESIGN AND IMPLEMENTATION.

3.1 Power Supply Circuit.

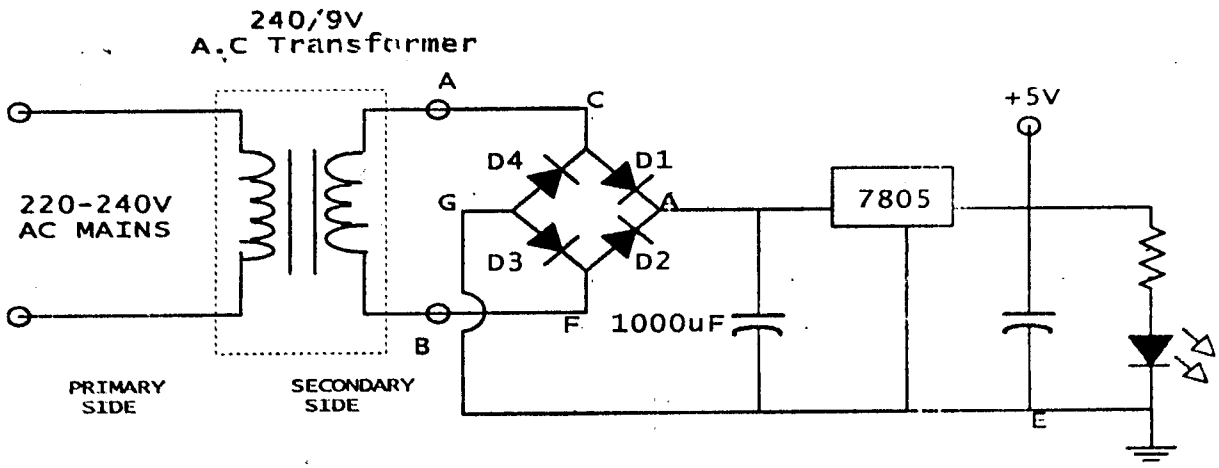

Figure 3.1: Power Supply Circuit Diagram.

Rectification Design Calculation:

$V_{out} = V_s - 2V_B$

V_s = secondary winding voltage,

V_B = voltage drop on a diode (in one half-cycle).

This formula holds for the negative half-cycle.

$V_s = 9V$

$V_B = 0.7$ (standard for Silicon diodes).

$V_{out} = 9 - 2 \times 0.7$

$= 9 - 1.4$

$= 7.6V$

Peak inverse voltage (PIV) chosen for each diode used = 7.6 + 0.7

= 8.3V

Peak secondary voltage (V_{sp}) = $\sqrt{2} \times 9$

= 1.414×9

= 12.726V

The peak full-wave rectified voltage at the filter input can be obtained thus

$V_{filter}(in) = V_{sp} - 2V_B$

= 12.726 – 1.4

= 11.326V

Filtered dc output voltage (V_{dc}) = $[1 - (4.17\times10^{-3}/R_1C_1)]\ V_{filter}(in)$

But, rms ripple (V_r) = $(2.4\times10^{-3}/R_1C_1)\ V_{filter}(in)$

Ripple factor (r) = V_r / V_{dc}

Given that, R_1 =330Ω, and C_1 = 1000μF

Filtered dc output (V_{dc}) = $[1 - (4.17\times10^{-3}/330 \times 1000\times10^{-6})]$ 11.326

= (0.98736)11.326 = 11.183V

$V_r = 2.4\times10^{-3}/(330 \times 1000\times10^{-6})$

$= 7.27\times10^{-3}$ V

Then, r = $7.27\times10^{-3}/11.326$

$= 6.42\times10^{-4}$

Setting the ripple factor to be r = 0.004

It Implies that, $0.004 = 0.0024/(R_1C_1 - 4.17\times10^{-3})$

$R_1C_1 = (0.0024/0.004) + 0.00417$

= 0.6 + 0.00417

= 0.60417

Choosing, $R_1 = 330\Omega$, $C_1 = 0.60417/330$

= 1831μF

A preferred value of 1000μF was chosen.

Rated voltage of capacitor is given as,

Capacitor Rated Voltage >= $\sqrt{2} \times V_{out}$

Capacitor rated voltage value ≈ $\sqrt{2} \times 7.6 = 10.75V$

A preferred value of 16V was chosen.

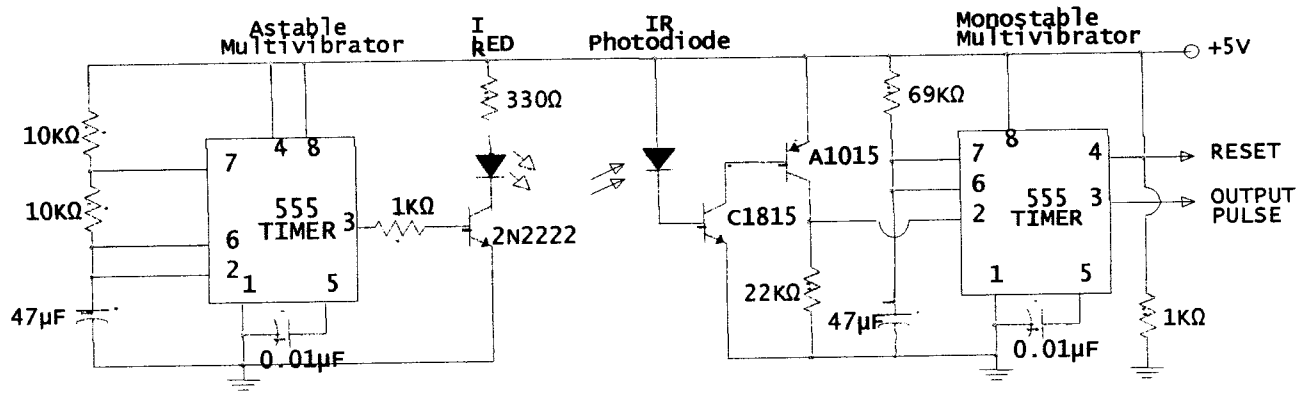

Figure 3.2: Opto-Electronic Circuit.

The oscillation frequency of the astable multivibrator is used to determine the frequency at which the infrared is transmitting. This is given below.

$f = 1.44 / (R_1+2R_2)C$

$= 1.44 / [(10\times10^3)+(2\times10\times10^3)]\times47\times10^{-6}$

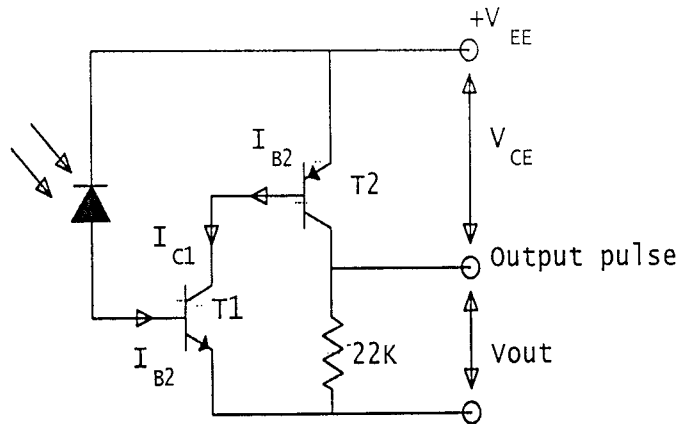

Figure 3.3: Transistor Circuit.

From figure 3.3, 'T_1' represents the C1815 (NPN) transistor operating in the common-emitter mode, while 'T_2' represents the A1015 (PNP) transistor operating in common-collector mode. The input current is provided by the base current of T_1 (i.e I_{B1}). The output current is provided by the collector current of T_2 (i.e I_{C2}). The output signal is V_{out}.

$I_{C1} \approx I_{B2}$ ..... [3.1]

But, current gain (β) = I_C / I_B ..... [3.2]

Then, $I_{C1} = \beta_1 I_{B1}$ and, $I_{C2} = \beta_2 I_{B2}$ ..... [3.3]

From equation [3.1], $I_{C2} = \beta_2 I_{C1}$ ..... [3.4]

Also, $V_{out} = R_C I_{C2}$ ..... [3.5]

From equation [3.4], $V_{out} = R_C \beta_2 I_{C1}$ ..... [3.6]

From equation [3.1], $V_{out} = R_C \beta_2 I_{B2}$ ..... [3.7]

Applying Kirchoff's Voltage Law at the output stage of the circuit,

$V_{EE} = V_{out} + V_{CE}$ ..... [3.8]

Where, V_{EE} = Emitter supply voltage = +5V

V_{out} = Output Collector voltage,

V_{EE} = Quiescent Emitter-Collector voltage.

From equation [3.8], $V_{out} = V_{EE} - V_{CE}$ ..... [3.9]

But, $V_{out} = R_C I_{C2}$ ..... [3.10]

Where, R_C = Collector resistor = 22KΩ

Then, from equations [3.9] and [3.10],

$I_{C2} = (V_{EE} - V_{CE}) / R_C$

$= (V_{EE} / R_C) - (V_{CE} / R_C)$

$= (V_{EE} / R_C) - I_{C2}$ ..... [3.11]

Where, $I_{C2} = (V_{CE} / R_C)$ ..... [3.12]

From equation [3.11], $I_{C2} = (V_{EE} / 2R_C)$ ..... [3.13]

Then, comparing equations [3.12] and [3.13],

$V_{CE} = V_{EE} /2$ ..... [3.14]

The d. c power delivered by the supply at V_{EE} is given as

$P_{ac} = (V_{EE} /2R_C) V_{EE}$

$= I_{C2} V_{EE}$ ..... [3.15]

From figure 2.2, the input and output pulse values can be obtained thus

From equation [3.14], $V_{CE} = V_{EE}/2$

$= 5/2$

$= 2.5V$

From equation [3.12], $I_{C2} = 2.5/(22\times10^3)$

$= 0.114mA$

From equation [3.5], $Vout = 0.114\times10^{-3} \times22\times10^3$

$= 2.508V \approx 2.51V$

From equation [3.4] and table 2.2, $I_{C1} = 0.114\times10^{-3}/100$

$= 1.14\mu A$

From equation [3.1], IB2 = 1.14μA

From equation [3.3] and table 2.1, $IB1 = 1.14\times10^{-6}/120$

$= 9.5nA$

From equation [3.15], the d.c power delivered by the supply at VEE is given as

$Pdc = 0.114\times10^{-3} \times 5$

$= 0.57mW$

3.3: Logic Control Circuit.

The monostable multivibrator is used to determine the time and frequency for each pulse count. This circuit involves a delicate pin-pin connection the monostable multivibrator, 74LS90 decade counter and the 74LS47 decoder ICs. The supply voltage is obtained from the supply circuit at +5V dc.

$T_{(high)} = 1.1\ RC$

$= 1.1 \text{ X } 39 \text{ X } 10^3 \text{ X } 47 \text{ X } 10^{-6}$

$= 2.02s$

$f_{(high)} = 1/T_{(high)}$

$= 1/2.02$

$= 0.495Hz \quad \approx 0.5Hz$

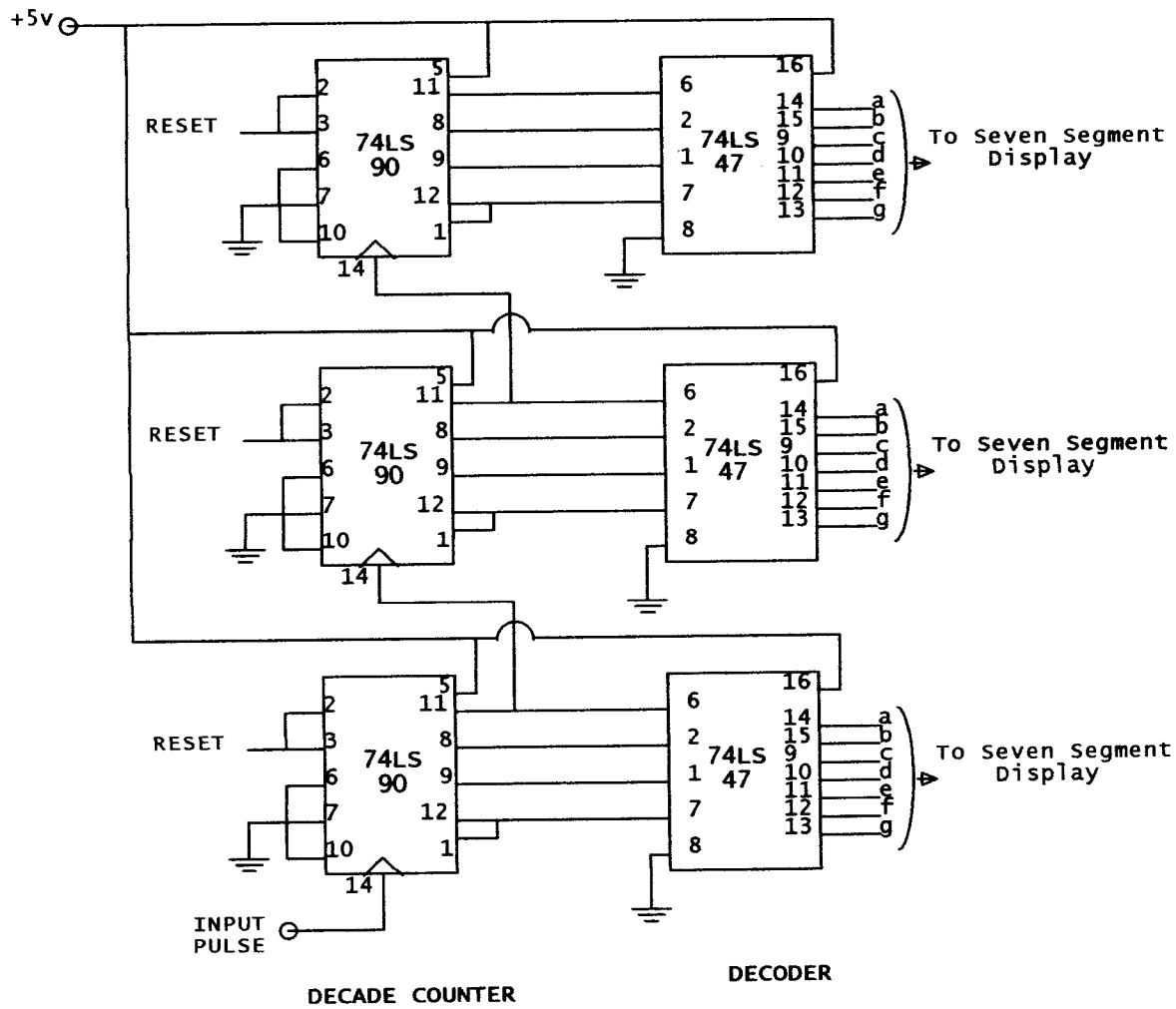

Figure 3.3: Logic control circuit.

3.4 Display Circuit.

This also involves delicate pin-pin connection from the 74LS47 decoder IC to the seven-segment display IC. The supply voltage is +5V obtained from the supply circuit.

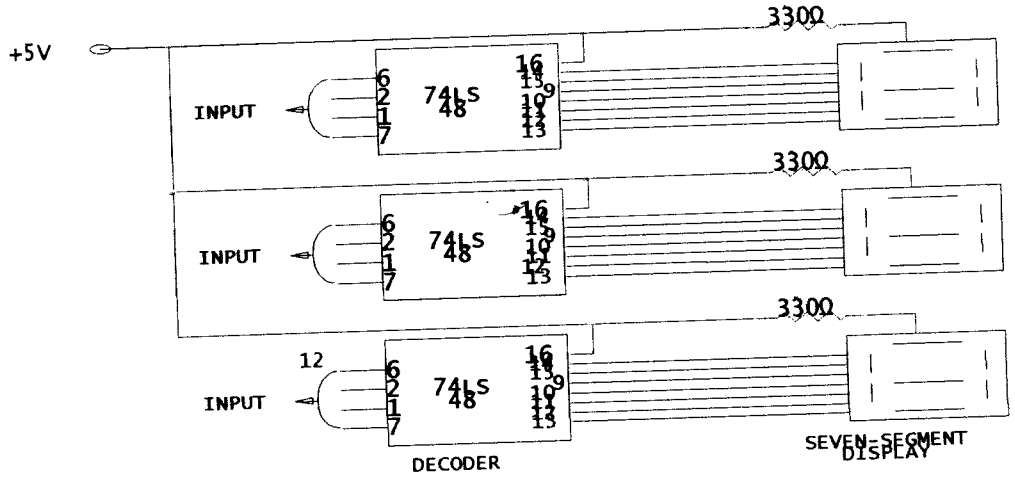

Figure 3.4: Display circuit.

Table 3.2: Table showing the counter's inputs and outputs

Decimal Digits.	Inputs.				Display Outputs.						
	D	C	B	A	g	f	e	d	c	b	a
0	0	0	0	0	0	1	1	1	1	1	1
1	0	0	0	1	0	0	0	0	1	1	0
2	0	0	1	0	1	0	1	1	0	1	1
3	0	0	1	1	1	0	0	1	1	1	1
4	0	1	0	0	1	1	0	0	1	1	0
5	0	1	0	1	1	1	0	1	1	0	1
6	0	1	1	0	1	1	1	1	1	0	0
7	0	1	1	1	0	0	0	0	1	1	1
8	1	0	0	0	1	1	1	1	1	1	1
9	1	0	0	1	1	1	0	0	1	1	1

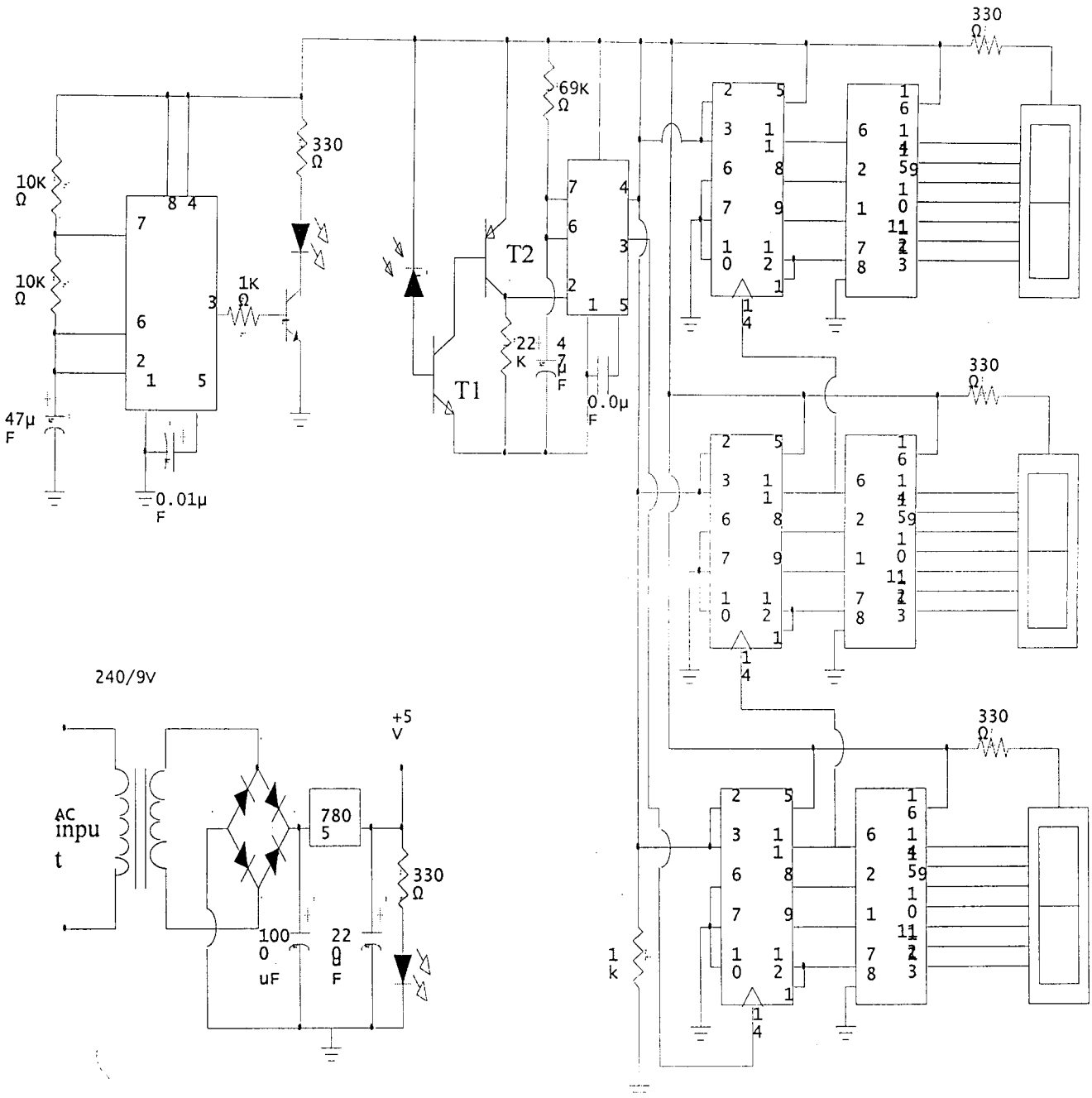

Figure 3.6: The Complete Digital Counter Circuit Diagram.

CHAPTER FOUR

4.0 CONSTRUCTION, TESTING AND OBSERVATION.

4.1 Circuit Construction.

The circuit construction of the project followed the design steps. It involved practical exercises like soldering and circuit architectural plan in regards to the circuit diagram. The construction was achieved by the division of the entire design circuit into modules called units and sub-units. Each unit was executed one after the other on a single working plan (the vero-board).

Great care was given to the construction of the power supply unit because of its importance to the entire circuit. All other modules of the entire circuit depend on it for power supply.

4.2 Case Construction.

The set-up was quite easy and flexible to allow for easy mobility. The casing of the constructed circuit was achieved with the use of a hard red-coloured plastic material of dimension 12×12cm. Bolts and nuts were used to hold the constructed circuit on to the case.

4.3 Testing.

Tests were carried out or performed during and after the construction. This was so as to ensure that the performance of the device in accordance with the design modules meets the aim of the project.

The testing basically involved the complete setting up of the device and providing input at the opto-electronic unit by walking across it, and also, observing the resulting output count at the display unit.

Continuity test, one of the most important tests among others, was carried out (using a multi-meter) on all the circuit modules so as to check for short circuits and unwanted bridges. The voltage ratings of the circuit components were verified with the aid of a multi-meter.

Observations were also made on the results obtained from which a conclusion was reached about the entire project.

Table 4.1: Test results table.

Tested Components	Results (volts)
555 timer IC	4.22
Diode	3.55
Counter	1.7
IR LED	1.91
IR photodiode	3.40

4.4 Observation.

The design was outright. The display count was incremented when the opto-electronic unit of the device was interrupted by a moving person. The display reset button, when

pressed, enabled the entire count to be zeros, '000'. The display does not count more than '999', it rather returns to '000'.

The count sometimes jumps or skips irregularly. The time delay for each clocking was manually chosen which is shown by the values of the resistor/capacitor (RC) combination.

CHAPTER FIVE

5.0 CONCLUSION AND RECOMMENDATION.

5.1 Concluction.

This project appreciably illustrates the relevance of digital electronics in counting applications. Modern electronics components, especially opto-electronics components, have extremely flexible features and attachments for numerous purposes which can relate a device with its environment status.

The reasonable level of acquired information/ideas for this project is obviously seen in the simplicity of the circuit construction and implementation. Information acquisition through the internet and quite a good number of text books/materials, as indicated in the reference section of this project was an invaluable exploration of a world of ideas. Thus the project depicts a real practical experience in digital electronics circuit design and construction, with significant highlights in things taught in class.

5.2 Problems Encountered.

- Initially, the IR transmitter was used at infinite frequency without the astable multivibrator.
- Difficulty in the casing the project due to some errors encountered in cutting the material to size.
- Skip count observed could be due to a debouncer.

5.3 Recommendation.

Considering the constraints upon which this work was carried out, some additional features can be included to give better and more precise counts.

- The project modification for better features/functions could be with the use of microcontrollers.
- Wider counting range could be achieved by incorporating more counters, decoders and seven-segment displays into the design.
- An alarm unit could also be incorporated in the design to sound each output count.
- Liquid Crystal Display (LCD) could be used for the display unit of the design so as to reduce power consumption.
- A debouncer cold also be incorporated in the design to avoid any form of skipping.

Finally, I recommend the use of this device only under effective supervision of a well trained staff, since it does not logically discourage error count, irrespective of the direction of motion of object across its opto-electronic unit.

REFERENCES

[1] George Ifrah, The Universal History of Numbers, from prehistory of the invention of the computer, Wiley, 1999

[2] Fermandes Luis, A Brief History of Abacus, 2003, http://www.ee.ryerson.Ca:8080/~elf/abacus/history.html

[3] Edward Hughes, Electrical Technology, Addison Weley, Longman Ltd, England, 1995, pp 415.

[4] Tokeim, Digital Electronics Principles and Applications, 6th Edition, Tata McGraw-Hill Publishing Company Ltd, 2004, New-Delhi, pp 378 – 504.

[5] Paul Hurwitz Winfield Mill, The Art of Electronics, Cambridge University Press, Australia, 1995, pp 178 – 214.

[6] Ajiboye, Computer Programming (ECE 224 lecture note), pp 1 – 3.

[7] B. L. Theraja & A. K. Theraja, The Texbook of Electrical Technology, 3rd Edition, S. Chand & Company Ltd,,2003, pp 919 – 1953.

[8] Ronald J. Tocci, Neal S. Widner, Digital Systems Principles and Applications, Prentice-Hall International Inc., New Jersy, 1998, pp 182 – 341.

[9] Gorgio-Hill, Principles of Electrical Engineering, McGraw-Hill Higher Education, Ohio, 2000, pp 360 – 392.

[10] **http://www.es.wowa.edu/jones/roling.**

[11] Donald E. Knuth, The Art of Computer programming, volume 2, 3rd Edition, Addison-Weley, pp 194 – 213.

[12] Yunusa A. Adediran, Applied Electricity, Finom Associates, 2000, pp 148.

[13] Robert L. Boylestad & Louis Nashelsky, Electronic Devices and Circuit Theory, 9th Edition, 2007.

[14] Engr. M. S. Ahmed & M. B. Zungeru, Laboratory Practical Manual (ECE 416), pp 106 – 107.

[15] Heathkit, Laboratory Experiments, Digital Techniques, pp 147.

APPENDIX

MANUAL OF OPERATON

1. Switch on the device by pressing the push button at the power supply unit (PSU), after connecting the power cable to the 220V AC mains. This switches the entire circuit on, indicated by the amber coloured LED at the PSU.
2. Strategically position the device within a tolerable range at the passage to be used.
3. Reset the display output to zero (000) using the reset button. This is so as to start a fresh count.
4. Thus the device is ready to be used for its intended purpose, under the supervision of a staff.