Enhancing Power Flow Control with UPFC – DG Coordination

Abubakar Sadiq Ahmad
Electrical and Electronics Engineering.
Federal University of Technology,
Minna, Nigeria
https://orcid.org/0000-0001-7169-2049

Muhammad Buhari
Electrical Engineering
Bayero University
Kano, Nigeria
https://orcid.org/0000-0003-3428-3574

Sunusi Sani Adamu
Electrical Engineering
Bayero University
Kano, Nigeria
https://orcid.org/0000-0001-6175-8382

***Abstract*—In order to effectively co-ordination the dynamic Flexible Alternating Current Transmission Systems called FACTS together with Distributed Generation (DG) is vital for improving grid stability, efficiency, and reliability. However, these resources are often planned in isolation, overlooking their interactions. In particular, existing works rarely address the Unified Power Flow Controller (UPFC), which is a multiple converter FACTS device under conflicting objectives such as enhancing the Available Transfer Capability (ATC), reducing power losses, and mitigating voltage deviations. This paper presents a bi-level multi-objective optimisation framework for coordinated UPFC–DG planning across transmission and distribution networks. Multi-Objective Particle Swarm Optimisation (MOPSO) is employed, with the outer level determining DG placement and sizing, and the inner level optimising UPFC allocation. Both real power (PV) and real–reactive power (PQ) DG models are considered. Validation was carried out on a synthetic WSCC 9 buses and IEEE 16 nodes as the transmission and distribution network respectively shows that coordinated UPFC–DG planning outperforms UPFC-only cases, with PQ-type DG offering the most significant improvements. Results are expressed as Pareto-optimal trade-offs, providing system planners with insights for enhancing power flow control, security, and efficiency.**

***Index Terms*—UPFC, Multi-Converter, DG, Transfer Capability, Power Flow.**

I. Introduction

To improve system performance, power systems operators at transmission and distribution networks often plan the integration of FACTS devices and small capacity Distributed Generators (DGs) into power grids. Offering benefits such as enhancing stability, reducing power losses, and providing economic advantages through increased transfer transactions [1]. The planning is targeted at addressing challenges with the demand growth and the intermittency of renewable energy sources [2]. However, FACTS and DG units are often not coordinated during their planning stages, instead being planned separately and ignoring possible influences, which can lead to operational challenges [1]–[4]. Additionally, in addressing power flow control in electrical grids, the UPFC and the Thyristor Controlled Series Compensator also known as TCSC have been explored. However, they offer non-optimal solutions for other objectives that are not considered. The non-optimal solution results motivated the search for multi-objective optimisation algorithms, such as Multi-Objective Optimization (MOO), to tackle the challenge. For instance, [5] deploys an adaptive grasshopper optimisation algorithm (AGOA) to solve the optimal power flow (OPF) problem, incorporating a Center-Node Unified Power Flow Controller (C-UPFC) optimally, and assuming a passive distribution network. This work by [6] investigates the optimal corporation of Distributed Static VAR Compensator (D-SVC) and Distributed Thyristor-Controlled Series Compensator (D-TCSC), which are non-voltage source converter (non-VSC) type FACTS devices. Similarly, [7] develop an approach for contingency-constrained coordination of TCSC, another non-voltage source converter (non-VSC) type FACTS device, and Distributed Generation (DG). An important parameter in a competitive electricity market is the capability of the transmission infrastructure remaining in the network for further power evaluation in the form of bidding transactions. Thus, [8] investigate the simultaneous allocation of DG and UPFC to analyse their impact on real power losses under stressed loading conditions. The primary objective is to minimise losses while ignoring the transfer capability. The authors in [9], assumes the presence of energy storage such as battery and UPFC for optimal cascaded three degree of freedom proportional integral (3DOF PI) controller for load frequency control in a two area deregulated power system, yet it ignore the interaction of UPFC with the energy storage as a distributed source of power flow. In the same vain, [10] deploys a non-linear controller Partial Feedback Linearization (PFBLC) for UPFC. Application of a quasi-oppositional, driving-training-based optimization approach to obtain a feasible optimal power flow solution in renewable power systems incorporating a UPFC is presented in [11]. Also, [1] considered the techno-economic benefits of integrating Distributed Generation (DG) sources with a Unified Power Flow Controller (UPFC). It develops multi-objective models to optimise the operation of the power system by considering the intermittent nature of renewable energy sources. The primary objectives include minimising power losses, increasing power flow in the lines (directly related to transfer capability), and reducing the fuel cost of thermal power plants through the optimal sizing and location of integrated DG and UPFC. While many studies have examined multi-VSC FACTS coordination with DGs, they often neglect multiple objectives, such as enhancing transfer capability and reducing power losses, despite the inverse relationship between the two. Multi-VSC

FACTS, like UPFC, however, can redirect power flows toward lower-loss paths when constrained. Moreover, prior works typically treated FACTS and DG planning as the responsibility of a single vertically integrated entity, whereas a horizontally integrated framework more accurately models transmission and distribution as separate but interconnected systems. This paper, an extension of our earlier papers where TCSC and SSSC were coordinated with DG, uses a similar approach in [4] and [12] to demonstrate the co-ordination of UPFC and DG in a coupled transmission and distribution network, for enhanced available transfer capability, reduced active losses, and minimized deviation of bus voltages from nominal profile. This paper's contribution is viewed from the complexities of multi-converter based FACTS like the UPFC.

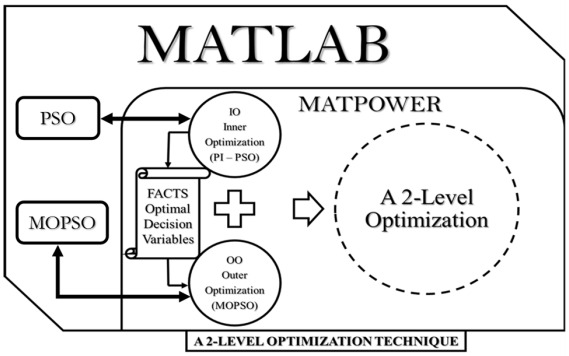

Fig. 1: Schematic of UPFC – DG Coordination.

II. UPFC – DG Coordination and Component Modeling

Fig. 1 depicts a schematic of the problem formulation and implementation of the UPFC – DG coordination, showing the outer and inner optimization and the bi-directional exchange of optimization parameters between MATPOWER and MATLAB. The implementation framework depicted in Fig. 1 indicates that the output of Inner optimization (IO) serves as additional input to the Outer Optimization (OO). It also shows MATPOWER's implementation for running CPF, while MATLAB is for the nature-inspired PSO and its multi-objective variant.

Equation (1) defines the problem formulation of UPFC – DG coordination for the objectives described by (11), which are subject to the constraints equations (2) to (8) for FACTS placement and equations (9) and (10) that forbids the sizes of DG not above 75% of the load in DN [4], [12].

$$\text{minimize } f(x,\lambda) = [f_1(x,\lambda),\ f_2(x,\lambda)...f_m(x,\lambda)] \tag{1}$$

$$f(x,\lambda) = 0 \tag{2}$$

$$0 \le \lambda \le \lambda_{\lim ited} \tag{3}$$

$$P_g^{\min} \le P_g \le P_g^{\max} \tag{4}$$

$$Q_g^{\min} \le Q_g \le Q_g^{\max} \tag{5}$$

$$S_{ij} \le S_{ij}^{rated} \tag{6}$$

$$V_i^{\min} \le V_i \le V_i^{\max} \tag{7}$$

$$X_{upfc_i}^{\min} \le X_{upfc_i} \le X_{upfc_i}^{\max} \tag{8}$$

$$0 \le \gamma_{dg}^{p} \le 0.75 P_{load}^{dn} \tag{9}$$

$$-0.75 Q_{load}^{dn} \le \gamma_{dg}^{q} \le 0.75 Q_{load}^{dn} \tag{10}$$

The parameterized load flow equation for CPF is described in (1), where x and λ are the state variable and the loading parameter of CPF respectively. $\lambda_{limited}$ is the obtained at any limiting constraint to power transfer, $P^{min}g$, $P^{max}g$, $Q^{min}g$, and $Q^{max}g$ are the minimum and maximum, real and active power limits of generator. Sij and S_{ij}^{rated} is the line power flow and its corresponding limit. $V^{min}i$ and $V^{max}i$ are the voltage operating range. $X^{min}upf c_i$ and $X^{max}upf c_i$ described the minimum and maximum UPFC control variables.

The fitness vector for the problem of available transfer capability, active loss, and deviation from nominal points of bus voltages is formulated as a minimisation problem described in an equation (11) for the UPFC – DG coordination using MOPSO. In (11), negating the ATC term transforms the fitness vector into a minimization front.

$$\overrightarrow{f}(x,\lambda) = \begin{cases} ATC = -(\sum\limits_{i \in \sin k} P_L^i(\lambda_{\lim ited}) - \sum\limits_{i \in \sin k} P_L^i(\lambda_0)) \\ P^{loss} = \sum\limits_{k=1}^{nl} g_k[V_i^2 + V_j^2 - 2V_iV_j\cos(\delta_i - \delta_j)] \\ VD = \sum\limits_{i=1}^{nb} |1 - V_i| \end{cases} \tag{11}$$

The choice of MOPSO is due to its suitability for solving complex, non-linear optimization problems with multiple, often conflicting, objectives. Additionally, the UPFC with multiple VSC increases the control variables due to the shunt and series voltage source converters.

A. DG - Model

In the static domain, the DG model ignores the dynamics of electronics when integrating DG units. Thus, DG is modelled as a negative load. Equations (12) and (13) describe the new loads (P_{nli}, Q_{nli}) after DG connection at the same node, where γ_{dg}^{p} and γ_{dg}^{q} are real and reactive power injections from DG units. P_{li} and Q_{li} models the active and reactive load at the ith node of a DN before DG planning.

$$P_{nli} = P_{li} - \gamma_{dg}^{p} \tag{12}$$

$$Q_{nli} = Q_{li} - \gamma_{dg}^{q} \tag{13}$$

Equations (12) and (13) implies Distributed Generation (DG) units offset a portion of the load demand at the specified distribution network (DN) node and are constrained by the system's power balance equations.

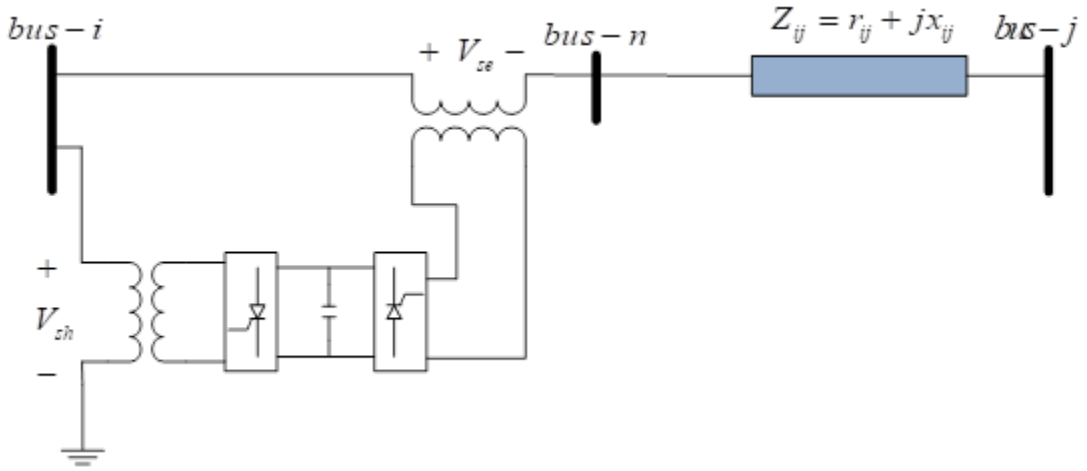

Fig. 2: Voltage Source Operating Principle of UPFC.

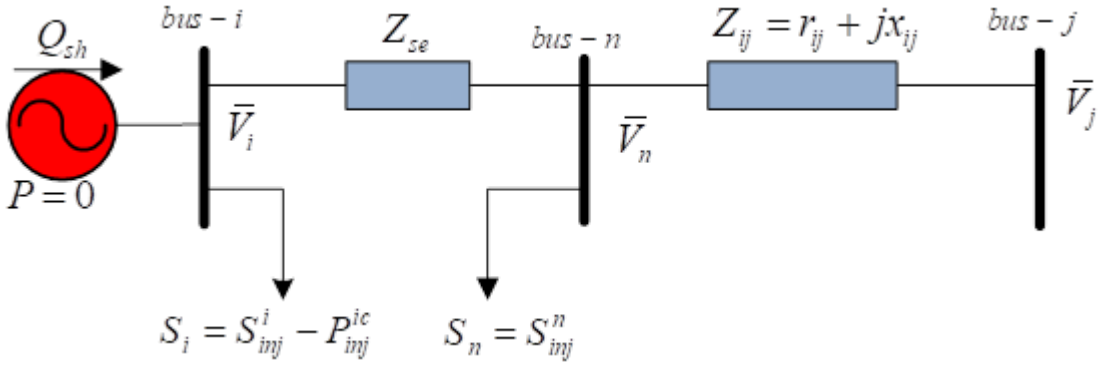

Fig. 3: Power Injection Model of UPFC [14].

B. UPFC Power Injection Model

Fig. 2 illustrates the equivalent model of a Unified Power Flow Controller (UPFC) using VSC representation. This is a key VSC-based FACTS device, comprising two back-to-back voltage source converters (VSCs) connected via coupling transformers: one in series with the transmission line and the other in shunt with a bus. Operating in coordination, they control both active and reactive power flow. The series VSC compensates for line voltage drops. At the same time, the shunt VSC injects or absorbs reactive power to regulate bus voltage magnitude [14]. Fig. 3 illustrates the complete Power Injection Model (PIM) of the UPFC, adapted from [14], which integrates the series converter representation of the SSSC with the shunt converter model of the STATCOM.

C. Test Network

To illustrate the prerogatives of transmission and distribution system operations and planning, an integrated network is used as a test system. Furthermore, to allow for comparison with FACTS such as the TCSC – DG documented in [10] and SSSC – DG coordination [4], similar power transfer transactions were implemented on the same test network. The test network comprises the $WSCC - 9$ bus and $IEEE - 16$

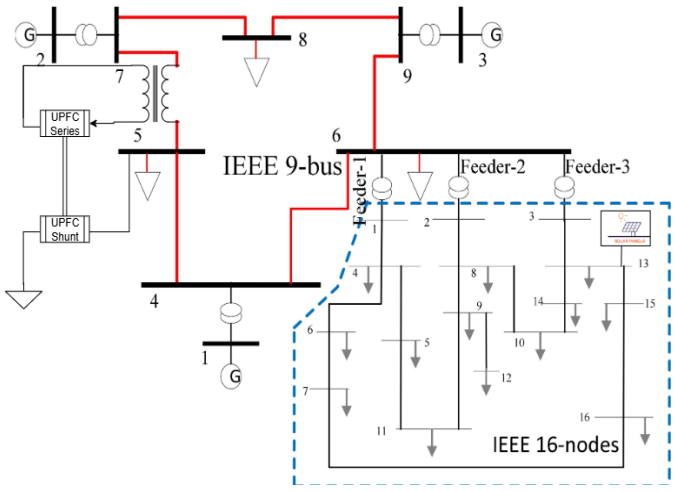

Fig. 4: Test Nework showing UPFC and DG.

nodes, representing transmission and distribution networks, respectively [7], [15]. Fig. 4 illustrate the single line schematic of the test system showing UPFC optimally coordinated on line 3(5 - 7) at transmission section and DG at node 13 of the distribution section. It is worthy to node that the numbering of the distribution nodes continues from 10 after the last bus

TABLE I: $UPFC$–PV_{DG} co-ordination results for $T1$ to $T5$

Trans	**ATC [MW]**		$UPFC$–PV_{DG} **Solution**							
ID	(Source – Sink)	$UPFC-PV_{DG}$	Ploss [MW]	VD [p.u.]	Line no.	V_{se} [p.u]	δ_{se} rad	V_{bsh} [p.u]	Node no.	P_{size} [MW]
T1	(1,3 - 5)	296.4555	4.3198	2.2864	3	0.0998	2.4239	1.09	21	11.34109
T2	(1,2,3 – 5,6)	177.5215	4.2239	4.2699	3	0.0787	2.089	1.0281	11	19.3935
T3	(1,2,3 – 6,8)	177.2558	4.9935	4.3374	8	0.0434	0.3634	1.09	26	16.12644
T4	(2,3 - 5)	104.9823	2.6451	3.9404	3	0.0999	1.5476	0.9961	21	2.338692
T5	(2,3 – 6)	66.7121	2.7459	2.7039	3	0.1	-3.015	1.0845	23	20.34522

TABLE II: $UPFC$–PQ_{DG} co-ordination results for $T1$ to $T5$

Trans	**ATC [MW]**		$UPFC$–PQ_{DG} **Solution**								
ID	**UPFC** Only	$UPFC-PQ_{DG}$	Ploss [MW]	VD [p.u.]	Line no.	V_{se} [p.u]	δ_{se} rad	V_{bsh} [p.u]	Node no.	P_{size} [MW]	Q_{size} [MVar]
T1	217.253	311.952	4.109	1.931	3	0.1	2.23	1.03	17	21.5	13
T2	171.603	195.643	3.349	3.540	3	0.093	2.258	1.08	18	11.882	13
T3	183.417	179.478	4.873	3.636	8	0.099	-0.20	0.95	57	0	12.177
T4	63.9503	120.669	2.766	3.64	3	0.1	1.568	0.91	14	2.254	13
T5	98.448	98.951	3.109	3.904	3	0.0001	-1.33	0.98	34	0.422	13

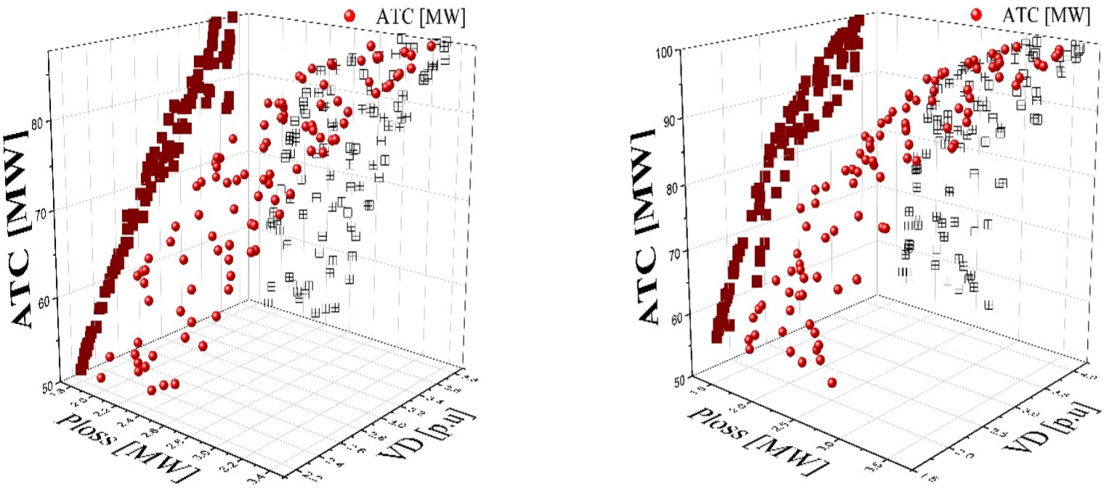

(a) 3D Pareto front for PV_{DG}.

(b) 3D Pareto front for PQ_{DG}.

Fig. 5: Pareto front of Transaction T5 with UPFC

of the distribution network. Thus node 13 correspond to node 21.

III. Results and Discussion

Similar power transfer transactions are implemented using the test network described in [4], [7] for the test system, which provides a basis for comparison when the DG is coordinated with the UPFC, TCSC, and SSSC. Tables I and II give the ATC enhancement with only UPFC and in coordination with PV and PQ types of DGs, respectively. Table I also specifies the transfer direction as a source–sink pair, indicating the power supply and demand bid directions, respectively.

From Tables I and II, it is observed that $UPFC$–DG coordination enhances ATC for transactions $T1$, $T2$, $T4$, and $T5$, respectively. It is also noted that the $UPFC$–PQ_{DG} coordination achieved superior ATC values compared to when coordinated with the PV type of DG. This is attributable to the VAr capability of the PQ model of DG, such as the DFIG wind turbines. For instance, while the PV type of DG coordination with the UPFC achieves an ATC of 296.45 MW, the PQ type of DG achieves an ATC of 311.95 MW, with even a slightly lower corresponding real power loss. Again, this is attributed to the ability of the PQ type of DG to inject VAr.

For the selected transactions $T5$, Fig. 5 depict the non-dominated 3D Pareto front plots for UPFC–DG coordination, respectively, with both PV and PQ models of DG.

From the combined 3D plots of Fig. 5, the Pareto plots slices of ATC against real power loss (Ploss) and ATC against voltage deviation (VD) are obtained. For the power transfer transaction $T5$, Fig. 6 and Fig. 7 give the slices of the Pareto front of ATC versus Ploss, as well as ATC versus VD with the $UPFC$–PV_{DG} and $UPFC$–PQ_{DG} coordination, respectively.

From the $UPFC$–PV_{DG} coordination of Figs. 7a and 7b the improvement of ATC, Ploss, and VD are 98.951

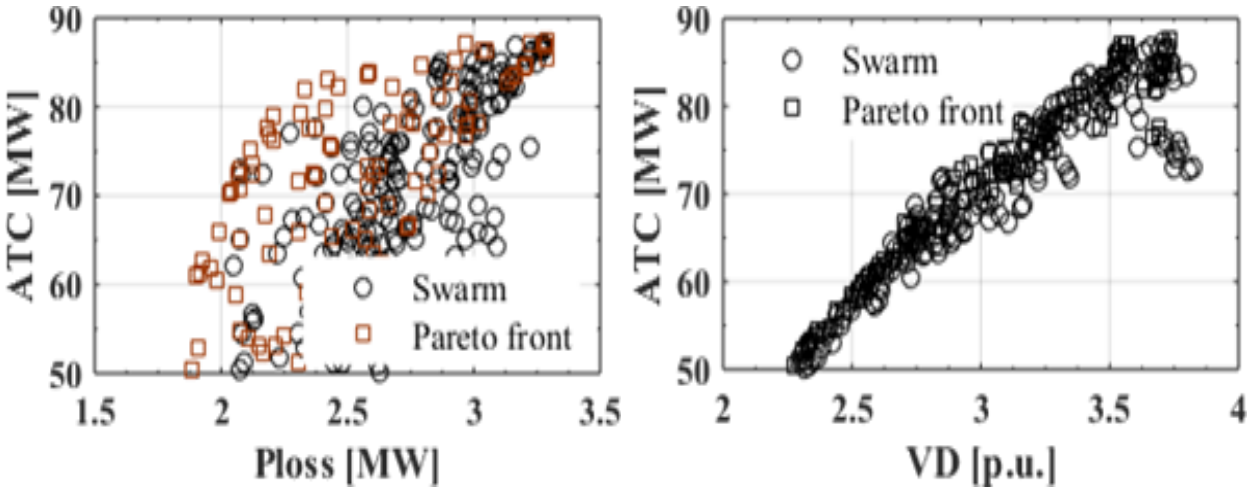

(a) 3D Pareto front for PV_{DG}. (b) 3D Pareto front for PQ_{DG}.

Fig. 6: Pareto front of Transaction T5 with UPFC

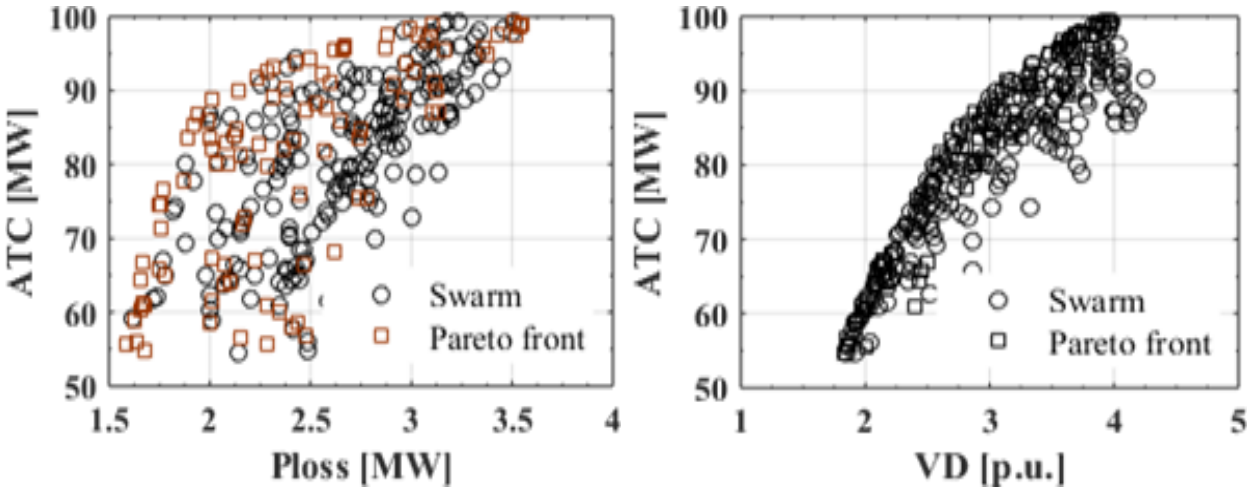

(a) 3D Pareto front for PV_{DG}. (b) 3D Pareto front for PQ_{DG}.

Fig. 7: Pareto front of Transaction T5 with UPFC

MW, 3.11 MW, and 3.904 p.u., respectively. Additionally, the relationship between the objective terms of Figs. 7a and 7b depicts non-linearity.

Further, it is observed that the slope of Figs. 5a and 5b approaches zero after 98 MW of ATC, necessitating a rigorous assessment of other transactions.

A comparison of ATC enhancement with UPFC and others such as Thyristor Control Series Compensator (TCSC) and Static Synchronous Series Compensator (SSSC) as reported in [4], [7], indicates for similar type of power transfer, the UPFC achieves superior ATC while also reducing power losses. This is attributable to both VAr compensation for voltage support at the shunt bus and series injected voltage for power flow re-distribution to avoid line flow congestion.

From the results, UPFC coordination with PQ_{DG} provides greater improvement of the multi-objective terms than PV_{DG}; thus, the $UPFC$–PQ_{DG} coordination offers the most significant improvements in the objective terms.

IV. Conclusion

This paper presents a bi-level, multi-objective optimisation framework for the coordinated planning of a Unified Power Flow Controller (UPFC) and Distributed Generation (DG) in integrated transmission–distribution networks. Unlike existing studies that treat UPFC and DG separately or overlook conflicting objectives, the proposed Multi-Objective Particle Swarm Optimisation (MOPSO) approach simultaneously maximises Available Transfer Capability (ATC), minimises real power losses, and reduces voltage deviation. The bi-level structure captures the distinct planning roles of transmission (inner level: UPFC) and distribution (outer level: DG). Case studies show that coordinated UPFC–DG planning significantly outperforms the UPFC-only baseline. Notably, UPFC with PQ-type DG, capable of supplying both active and reactive power, achieved the best results, surpassing both UPFC-only and $UPFC$–PV_{DG} strategies. The results, expressed as non-dominated Pareto solutions, provide planners with practical

insights into trade-offs among competing objectives, offering a robust tool for enhancing grid security, efficiency, and reliability. Importantly, the 2D Pareto plot provide guides to power systems planners about the maximum ATC with a given type of FACTS, above which further investment in FACTS sizes to improve ATC does not pay-off, rather increases the power losses.

REFERENCES

[1] Gandotra R, Pal K. "Economic assessment of a power system network integrating renewable DG sources with UPFC controller," Int J Green Energy [Internet]; Vol. 01(00), pp. 1–25. 2025. Available from: https://doi.org/10.1080/15435075.2025.2514489

[2] Mohanty S, Samal P, Senapati RN. "Performance Improvement of Power Transmission Networks under Stressed Condition," J Phys Conf Ser. vol. 2335(1) pp. 1-15. 2022. doi: 10.1088/1742-6596/2335/1/012047.

[3] Felsy Felix Pereira ENS. "A DWT based Differential Relaying Scheme for Transmission line Interconnecting DG and UPFC," Int J Adv Res Electr Electron Instrum Eng. vol. 4(10), pp. 8182–8. 2015. doi: 10.15662/ijareeie.2015.0410019.

[4] Sadiq AA, Damari IA, Buhari M, Adamu SS, Amabfi JG. "FACTS - DG Coordination in an Integrated Transmission & Distribution Network (iT & DN)," J Eng Adv Technol Sustain Appl. vol. 1(1), pp. 17-24, 2025. doi: 10.21608/jeatsa.2025.427794.

[5] Alhejji A, Ebeed Hussein M, Kamel S, Alyami S. "Optimal Power Flow Solution with an Embedded Center-Node Unified Power Flow Controller Using an Adaptive Grasshopper Optimization Algorithm," IEEE Access. vol. 0, pp. 119020-119037, 2020. doi: 10.1109/ACCESS.2020.2993762.

[6] Ahmed EM, Rakočević S, Ćalasan M, Ali ZM, Hasanien HM, Turky RA, et al. "BONMIN solver-based coordination of distributed FACTS compensators and distributed generation units in modern distribution networks," Ain Shams Eng J. vol. 13(4), pp. 1-17, 2022. doi: 10.1016/j.asej.2021.101664.

[7] Sadiq AA, Buhari M, Ambafi JG, Adamu SS, Nwohu MN. "Contingency constrained TCSC and DG coordination in an integrated transmission and distribution network: A multi-objective approach," e-Prime - Adv Electr Eng Electron Energy, vol. 4, pp. 1-15. April 2023. Available from: https://doi.org/10.1016/j.prime.2023.100156.

[8] A. N. Alsammak and H. A. Mohammed, "Power quality improvement using fuzzy logic controller based unified power flow controller (UPFC)," Indones. J. Electr. Eng. Comput. Sci., vol. 21, no. 1, pp. 1–9, 2021, doi: 10.11591/ijeecs.v21.i1.

[9] Haldar K, Goswami SK, Debnath S. Improved frequency control performance of restructured multi-area power system through optimized controller design. Electr Power Syst Res. 2024;231(February).

[10] S P, Thampatty KCS, Nambiar TNP. Design and Implementation of Partial Feedback Linearization Controller for Unified Power Flow Controller. Electr Power Syst Res. 2020;187(June).

[11] Sarkar T, Paul C, Dutta S, Roy PK, Tejani GG, Mousavirad SJ. Application of quasi-oppositional driving training-based optimization for a feasible optimal power flow solution of renewable power systems with a unified power flow controller. Front Energy Res. 2025;13(May).

[12] Sadiq, A. A, Yusuf L, Buhari M., Adamu S. S, and Ambafi J. G, "Coordination of Flexible Alternating Current Transmission Systems and Distributed Generation in a Synthetic Co-simulation of Transmission and Distribution Network," Turkish J. Electr. Power Energy Syst., vol. epub ahead, 2024. doi: 10.5152/tepes.2024.23026.

[13] Venkateswara R. M, Sivanagaraju S, and Suresh C. V, "Available Transfer Capability Evaluation and Enhancement using Various FACTS Controllers: Special Focus on System Security," Ain Shams Eng. Journal, Prod. hosting by Elsevier, vol. 7, no. 1, pp. 191–207, 2016, doi: 10.1016/j.asej.2015.11.006.

[14] Sadiq, A. A, Buhari M, Adamu S. S, and Musa H, "Coordination of multi-type FACTS for available transfer capability enhancement using PI-PSO," IET Gener. Transm. Distrib., vol. 14, no. 21, pp. 4866–4877, 2020, doi: 10.1049/iet-gtd.2020.0886.

[15] Sadiq, A. A, Buhari M, Adamu S. S, "Optimal distributed generation planning in distribution networks: A comparison of transmission network models with FACTS," Eng. Sci. Technol. an Int. J., vol. 22, no. 1, pp. 33–46, 2019. doi: 10.1016/j.jestch.2018.09.013.