DESIGN AND CONSTRUCTION OF A MULTI CHANNEL LIQUID LEVEL DETECTOR.

BY

OKOSUN AGBONMERE

MATRIC NO 98/7157EE

DEPARTMENT OF ELECTRICAL/COMPUTER ENGINEERING

FEDERAL UNIVERSITY OF TECHNOLOGY MINNA

NOVEMBER 2004

DESIGN AND CONSTRUCTION OF A MULTI-CHANNEL LIQUID LEVEL DETECTOR.

BY

OKOSUN AGBONMERE

MATRIC NO. 98/7157EE

A THESIS SUBMITTED TO THE DEPARTMENT OF ELECTRICAL/COMPUTER ENGINEERING SCHOOL OF ENGINEERING AND ENGINEERING TECHNOLOGY, FEDERAL UNIVERSITY OF TECHNOLOGY, MINNA.

IN PARTIAL FULFILMENT TO THE REQUIREMENT FOR THE AWARD OF THE DEGREE OF BACHELOR OF ENGINEERING (B.ENG)

IN

ELECTRICAL/COMPUTER ENGINEERING

NOVEMBER, 2004.

DEDICATION

I dedicate this project to God who has always been faithful even when I wasn't.

And to my parents for their loving support.

DECLARATION

I hereby declare that this work was carried out by **MISS OKOSUN AGBONMERE** in the department of ELECTRICAL/COMPUTER ENGINEERING

, Federal University of Technology, Minna, Niger state.

..... 13/12/04

MR PAUL ATTAH **Date**

(Project supervisor)

....

ENGR ABDULLAHI **Date**

(Head of department)

....

External examiner **Date**

ACKNOWLEDGEMENT

I wish to express my sincere gratitude to my parents' professor and Mrs. Okosun for their support and assistance.

I use this medium to say a big thank you to my brothers Eromosele and Odianosen for being of great support to me.

I wish to acknowledge Mr. Paul Attah for his brotherly assistance which led to the success of this work.

My profound gratitude goes to the technical and academic staff of the department of electrical/computer engineering whose advice and technical assistance guided me through this project work.

. I would like to acknowledge my friends and colleagues Ibanga Emmanuel, Ezunu Chinedu, Abdulsallam Nasiru, Muritala Zungeru and Zubeiru Ismailla, for the academic drive and inspiration they instilled in me.

I wish to also say a big thank you to my friends Obinna Uzoh, Nsude Nneka and Kafayat Saidu, for being my friends through out my first degree programme in FUT Minna. I hope God keeps us together a long time from now.

To crown it all, I would like to acknowledge the words of my friend and father who always told me that the sky was no longer my limit.

ABSTRACT

This project deals with the construction of a liquid detector which forms the basis for a multi-channel water level detector/alarm system. There are various ways in which the objectives of this circuit could be achieved, but emphasis is to be given to the techniques employed in liquid detection based on probes inserted at different levels in the channels. Voltage drop across the probes due to resistance of water and comparison of the signal with the fixed signal.

The circuit will conveniently switch on a light emitting diode and an alarm circuit. The lighting of the LED and the alarm of the circuit depends on the output at the comparator circuit which is a function of the incoming signal and the reference signal.

Once the voltage drop across the probes is low compared to the reference voltage, the output of the comparator goes low. But as compared to the input voltage (v+), the LED comes on and the output is fed to the Thyristor through the diodes. The gates of the Thyristors are thus fired and the alarming circuit is switched on.

The multi-channel liquid detector/alarm system was designed constructed and tested.

TABLE OF CONTENT

TITLE PAGE	I
DEDICATION	II
DECLARATION	III
CERTIFICATION	IV
ACKNOWLEDGEMENT	V
ABSTRACT	VI
TABLE OF CONTENT	VII

CHAPTER 1 (INTRODUCTION)

1.1 Introduction	1-2
1.2 Generalized Block Diagram	2
1.3 Design Specification	3
1.4 Op-amps And Comparators	3
1.4.1 Structures and operation notes	3-6
1.4.2 The ideal differential operational amplifier	6-8
1.5 IC Timers	8-9
1.6 Alarm Circuit	9-10
1.7 Other Passive Components	10
1.8 Aims and objectives of the project	11

CHAPTER 2 (DESIGN & ANALYSIS)

2.0 Principle of Operation	12
2.1 Comparator / Liquid Level Sensor	12-14
2.2 Thyristor Switching Stage	14-15

2.3 Alarm Circuit 15-16
2.4 Power Supply Stage 17-18
2.5 Comprehensive Circuit Diagram 19

CHAPTER 3 (TESTING & CONSTRUCTION)

3.0 Testing 20-22
3.1 Construction 22
3.2 Problems Encountered 23

CHAPTER 4(CONCLUSION AND RECOMMENDATIONS)

4.0 Conclusion 24
4.1 Recommendations 24-25
4.2 References 26-27
4.3 Appendix 28-30

CHAPTER 1

1.1 INTRODUCTION

Electronic systems refine, extend or supplement human facilities and ability to observe, perceive, communicate, remember, calculate or reason. Electronic systems are classified as either analog or digital.

Analog systems change their signal output linearly with the input and can be represented on a scale by means of a pointer. In the other hand, digital instruments or circuits, represent their output as two discrete levels ('1' or '0') and could show their output in a digital display either numerically or alphabetically.

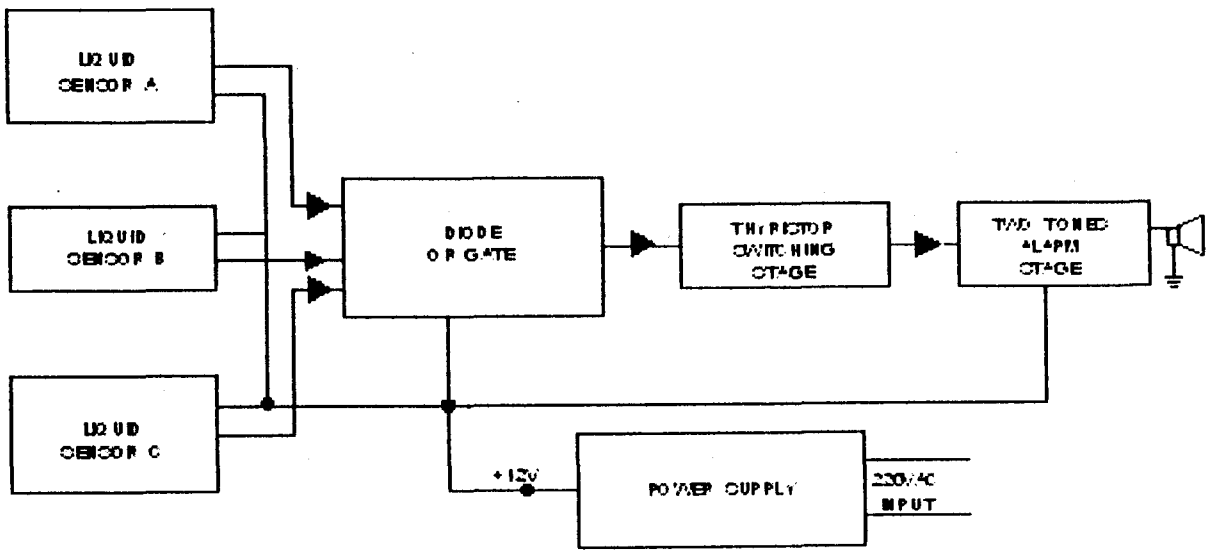
This project involves the design and construction of a multi- channel liquid activated alarm. Liquid and steam activated alarms can be made to sound when liquid in a tank reaches a preset level, or rain water falls across a pair of contacts, or when flooding occurs in a cell or a basement or when an impact wave is generated as a person or object fall into a swimming pool or tank.

System activated alarms can be made to sound when high pressure steam escapes from a valve or a fractured pipe, or when steam emerges from a spout of a kettle or container as the liquid reaches its boiling point. Although this project is a liquid activated alarm, it still relates thoroughly to steam activated alarm circuits and the circuit could be adapted to form a steam activated alarm by changing resistor values in the sensor stage.

In the liquid activated alarm, a pair of metal probes detects the presence or absence of the liquid the probes 'see', a near finite resistance is detected and made to activate the alarm device. The resistance appearing across the probes under the alarm condition when it has sensed depends on the type of medium that is being detected. In the case of rain or tap, the resistance may be less than a few kilo ohms but the case of steam or oil differs here the resistance may be greater than several mega-ohms. As a case study for this project water (H_20) was taken into consideration, and as earlier mentioned, for other liquid or steam the same circuit could be used by adjusting resistor values.

The generalized block diagram in Fig. 1.1 gives a summary of the entire project and circuit design.

1.2 GENERALIZED BLOCK DIAGRAM



GENERALIZED BLOCK DIAGRAM (MULTICHANNEL WATER LEVEL DETECTOR)

1.3 DESIGN SPECIFICTAIONS

NO OF CHANNELS	:	THREE
SENSOR PROBE	:	GALVANIZED METAL
LIQUID TYPE	:	WATER
INPUT VOLTAGE	:	220VAC
SUPPLY VOLTAGE (CIRCUIT)	:	+12V.D.C
ALARM TYPE	:	TWO TONE

1.4 OP-AMPS & COMPARATORS

Operational amplifiers are differential amplifiers with extremely high open voltage gain. Negative feedback circuits are employed in op-amps to control the gain when precise gain values are needed. The comparator is an operational amplifier without a feedback. Hence, it is controlled by the open loop voltage gain.

1.4.1 STRUCTURES AND OPERATION NOTES

An amplifier is represented diagrammatically by a triangular arrow-head pointing in the direction of the data flow we input to output. A differential operation amplifier with a seven pin base is shown in fig 1.0. The function of the terminal connections will be examined although the numbers and positions shown in fig. 1.0 have no special significance.

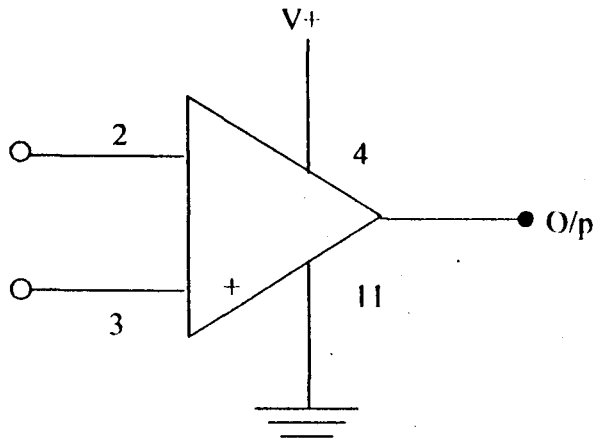


Fig. 1.0: Terminals on a Differential Operational Amplifier

Terminals 4 and 11 are the power supply terminals in general. The amplifier must be supplied with two stabilised d.c. voltages, e.g. +15 and –15, with respect to the common line or +15 or +12 and –0 volts for single supply. Pin 11 is grounded in such a case and pin 4 taken to V^+. This enables the unit to amplify a d.c. input signal which may be positive or negative with respect to the common reference level. These supply voltage level are not critical although the manufacturer specifies the voltage at which the reported performance figures were recorded. Most amplifiers will function satisfactorily with reduced gain at voltages +9 and –9. Batteries of adequate capacity may be used or modular mains-operated power supplies are available providing -15 – 0 – +15 volt at the terminals of the common line. It is also advisable to provide a ratio frequently by connecting a 0.1µf capacitor between each power supply terminal and earth. The quiescent current from the power supply may be typically 3mA, whereas the maximum current drawn may be 12mA; operational amplifiers demanding much less power than this are also available.

Terminal 2 is the inverting input terminal. A voltage applied between this terminal and the common line appears in an amplified and inverted

form between the output terminal and the common line. For a d.c. input signal inversion means a change of sign, for an a.c. input signal, inversion means a change of phase by 180^0 i.e. the output signal is in anti-phase with the input signal.

In circuit diagram, the inverting terminal is identified by a negative sign. For an amplifier to be termed "operational" it must invert the input signal.

Terminal 3 is non-inverting input terminal identified in circuit diagram by a positive sign. Any input signal applied between the terminal and the common line appears at the output in an amplified form and in-phase with the input signal.

If the input terminal 4 is connected to the common line, the amplifier is left with one input terminal and is said to be "single-end". Difference amplifiers with low inputs are much more versatile so they will be examined more fully and the single-ended version will be treated as a special case.

Terminal 1 is the output terminal where the output voltage Vo is developed relative to the common line. An eighth pin is provided if frequency-compensating components have to be connected externally. The manufacturers' state the values required when the amplifier is operating at a particular gain. When a different gain is selected, the frequency-compensating component must be changed if the amplifier is to operate in a stable manner.

It will be assumed henceforth that the corresponding components have been incorporated in the operational amplifier itself as is very often the case.

1.4.2 THE IDEAL DIFFERENTIAL OPERATIONAL AMPLIFIER

An ideal differential amplifier is sensitive to a difference of potential between its two point terminals, but will not respond to any voltage applied to both the input terminals simultaneously. The ability of the amplifier to ignore or reject this "common mode signal" is very valuable. An ideal operational amplifier is furthermore assumed to have the following characteristics:

a. **Infinite Gain**

When the gain of an amplifier is very high, the performance of a sub-system which makes use of the amplifier depends only on the input and feedback network. Typically, the d.c. open loop voltage gain, AVo_1 (the voltage gain without feedback) may be 10^5 or 10^6 or more in practice.

b. **Infinite Input Impedance**

With the condition satisfied, the output current to the amplifier is zero by the use of field effects transistors and good design, differential input impedance (impedance between the two input terminal(s) may be as high as 10^{12} in practice). Furthermore, the common mode input impedance (the result of the parallel combination of each input terminal to the common line) may also be 10^5 or 10^6 or more in practice.

C. **Infinite Band Width**

The bandwidth of an amplifier is the frequency range over which the gain is virtually constant. If this extends from zero to infinity, the amplifier will

respond equally will to d.c. or a.c. signals of any frequency would occur. In actual amplifier, the gain is reduced progressively at higher frequency up to 100KHz and the frequency at which the voltage gain is unity (i.e. 0dB) may by 3mHz.

d **Zero Output Impedance**

With this condition satisfied, the output would be unaffected by alteration of band.

e. **Zero Voltage**

This implies that when the voltage between the input terminals is zero, the output voltage will be zero.

The op-amp was originally developed for use with analog computers but now they found place in almost all aspect of electronics. The op-amp has the following ideal characteristics;

Infinite voltage gain

Infinite input impedance

Infinite bandwidth.

In practice however there are deviations from ideal conditions due to manufacturing processes and other physical conditions the various components might be subjected to which make up the op-amps. Below show the actual characteristics of μA741 op-amp.

Voltage gain – 106dB (numerical gain = 2000000.0)

Input impedance – 1MΩ

Output impedance – 7500Ω

Bandwidth – up to 1MHz

The voltage gain and bandwidth are two parameters that most be critically looked, for successfully application of this device. More information about the parameters could be gotten from IC date sheets

$V_{out} = A_0 V_{in}$

Where A_0 = open loop voltage gain.

And $V_{in} = V^+ - V^-$

Due to the very high A_0, V_{out} will tend to saturate upon any difference in input. Other op-amp circuits include, inverting and non – inverters amplifiers, summing amplifiers, unity gain buffers etc.

1.5 IC TIMERS.

The emanation of IC timers eliminated a wide range of mechanical and electromechanical timing devices .It also helped in the generation of clock and oscillator circuits.

Timing circuits are those, which will provide an output change after a predetermined time interval. This is, of course, the action of the monostable multivibrator, which will give time delay after a fraction of a second to several minutes quite accurately. The most popular of the present IC, which is available in an eight, pin dual in line package in both bipolar and CMOS form. The 555 timers is a relatively stable IC capable of being operated as an accurate bistable, monostable or astable multivibrators.The. The timer comprises of 23 transistors, 2diodes and 16 resistors in its internal circuitry.

The functional diagram consists of two comparators, a flip-flop, two control transistors and a high current output stage. The two comparators are actually operational amplifiers that compare input voltage to internal reference voltages which are generated by internal voltage divider of three 5K resistors.

1.6 ALARM CIRCUITS

Alarm circuits fall into two basic categories; security alarms (which include burglar, antitheft, fire, smoke detector etc) and instrumentation alarms (like those used in electronic devices such as clocks, metal detectors, digital phones etc).

Security alarms are usually dual tone or multi-tone alarm systems as in siren and other hazard alarms. Their generation is done via a combination of tones in which different frequencies are generated and modulated to give the various tones. Discrete electronic multivibrator circuits could be used to generate two tones and after generation of the tone, amplification to allow for loudness of the generated tone. Another way is to get a sounder, which is an alarm circuit already designed in a module and could be initiated by switching a power supply to it. Different sounders operate at different voltages and can generate different sequence of tones. Instrumentation alarms on the other hand give usually beeping tones or a particular melody. The beeping of these alarm circuits are achieved using a buzzer. The buzzer has an in built oscillator which generates a particular frequency, once powered the buzzer is activated. To achieve a beeping alarm, an

astable multivibrator will be used to power the buzzer. And the beeping rate will depend on the frequency of the astable multivibrators.The astable multivibrator could also be used to generate a single tone and coupled to a speaker to get the sound output (sometimes via an amplifier if loudness of sound is required).In this case a buzzer is not needed.

1.7 OTHER PASSIVE COMPONENTS

Passive components are components, which cannot amplify power and require an external power source to operate. They include resistors, capacitors, diode, indicators, and transformers etc. their application range from potential dividers to control of current (as in resistors), filtration of ripples voltages and blocking of unwanted D.C voltages (as in capacitors). They form the elements of the network circuit oscillator stages and are also used generally for signal conditioning in circuits. Their schematic diagrams and symbols are shown in **Appendix 1.**

CHAPTER TWO

DESIGN AND ANALYSIS

2.0 PRINCIPLE OF OPERATION.

The principle of operation has to do with the sensing of different water levels to activate an alarm system. The liquid resistance once sensed biases the comparator stage and gives HIGH output which switches a thyristor and powers the alarm system.

The two sensors in each tank are placed at the two discrete levels to detect when the water passes in the tank. Once the upper sensor senses the liquid and gives a HIGH output from a comparator to switch the Thyristor and the alarm.

The alarm is activated when the Thyristor switches. The system continues alarming until it senses no more water in the tank and the reset switch is pressed. The analysis of other stages is shown in fig 2.1.

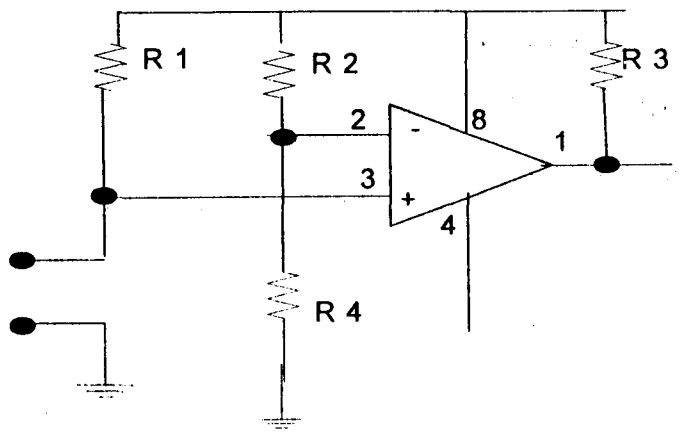


Fig 2.1 Comparator/liquid level sensor

The liquid level detector stage uses a set of probes inserted into the liquid to sense the liquid. Once inserted in the liquid, resistance of the liquid creates a potential difference which when compared with a force reference gives a voltage at the comparator output

The resistance across the probes without liquid is more or less an open circuit hence there will be full voltage drop across the probes. Mainly $V^- > V^+$ and V_{out} zero.

Once in the liquid, the resistance is a few kilo ohms (approx. 100kΩ) for water. Hence, the drop across probes would be

$$Vp = \frac{R}{L_R + R_1} \times V^+ \quad \text{.....2.1}$$

(Where L_R = liquid resistance V+ =12V)

$$= \frac{100k}{100k + 1M\Omega} \times 12$$

$$= 1.09V$$

$$\approx 1V$$

Hence, there are two distinct levels, i.e. 12V without liquid and 1V with liquid. The comparator is thus set at a reference of 8V.

Where Vref (reference voltage) is the voltage across the Ref.

For Vref = VR4 =8V

$$\Rightarrow \quad VR4 = \frac{R4}{R3 + R4} \times V^{+} \quad \cdots\cdots 2.2$$

$$8V = \frac{2.2K}{2.2k + R3} \times 12 \quad \text{(letting R4 =2.2k)}$$

$$0.6\,(2.2k - IR_3) = 2.2k$$

$$1.32k + 0.6R_3 = 2.2k - 1.32k$$

$$R_3 = 1.46k$$

$\approx$ 1k preferred values

2.2 THYRISTOR SWITCHING STAGE

The thyristor stage, once triggered by the switching circuit, latches a high voltage in its cathode. The output of the cathode is used to power relay which in turn powers the alarm circuits.

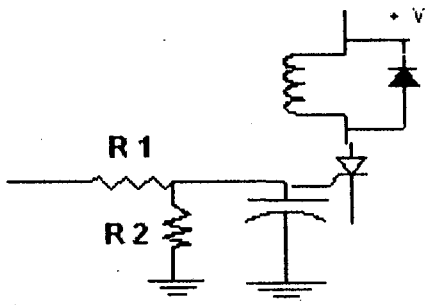


Fig. 2.2a. Thyristor switching circuit.

The gate voltage required to switch the thyristor to forward conduction is always indicated in the data sheet. The thyristor gate voltage V_{GT} in this case is 2V (from data sheets) hence, since the output of the transistor switch gives +12Vdc; we want the drop across R5 to be 2V

V_{R5} = 2V, and Vin = 12V,

But $V_{R5} = \frac{R5 \times Vin.}{R4 + R5}$

Now letting R5 = 1k. Gives R4 =5K (4.7k preferred value).

Upon switching the thyristor 12V is dropped across the relay and remains there until the resetting occurs by switching depressing S1. The reset switch is placed on the finished project.

2.3 TWO TONE ALARM CIRCUIT.

The alarm circuit is a two tone siren type alarm. It falls under the category of security alarm systems. The alarm circuit is a combination of two astable multivibrators.The astable oscillates at different frequencies of which one is used to modulate the other. Modulation is achieved from pin5 (control voltage). For normal astable operation pin 5 goes to zero via a capacitor of 0.01μF but if a voltage of between 45% and 90% of V_{cc} applied to pin5, frequency modulation occurs. Coupling the voltage via a capacitor creates a kind or warble tone, due to the charging and discharging of the battery. Fig 2.3a shows the circuit of the two tone alarm.

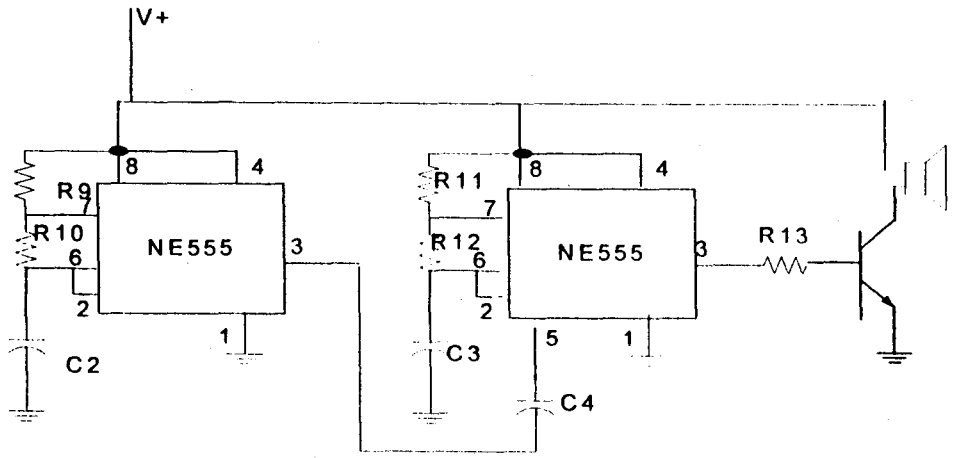


Fig 2.3a Two-tone Siren.

The first monostable is used to modulate the second which generates a constant tone. The warble effect is achieved by coupling the modulating signal via capacitor C4.For the first monostable a frequency of 3Hz is generated.

DESIGN CALCULATIONS;

$t_1 = 1.1C (R_1 + R_2)$ seconds (where t_1 = ON time)

$t_2 = 0.693CR_2$ seconds (where t_2 is the OFF time)

Since $F = 1/T$

& $T = t_1 + t_2$

$F = 1/ \ln 2C (R_1 + 2R_2)$ seconds

$F = 1.44/ (R_1 + 2R_2) C$ ..... (1)

Letting R1 = 10K and C = 100μF for F=0.5Hz (for the modulating astable)

Substituting the values into equation 1

$R_2 = 9.4K$

For F=1 KHz, letting R1=47K and C=10nF (for the tone generator stage)

Substituting values to equation 1 gives R2 = 48.5KΩ

A variable resistor of 100K was however used.

2.3 POWER SUPPLY STAGE.

All stages in the project use +12V. The power supply stage is a linear power supply type and involves in step down transformer, filter capacitor, and voltage regulators, to give the various voltage levels. The power supply circuit diagram is shown in fig. 2.4a

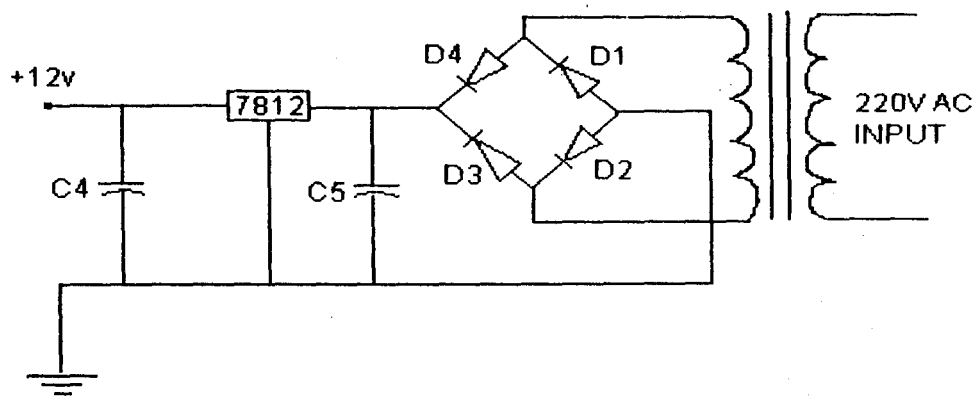


FIG 2.4a Power supply stage.

The rectifier is designed with four diodes to form a full wave bridge network. C_1 is the filter capacitor and C_1 is inversely proportional to the ripple gradient of the power supply. Fig. 2.4b shows the ripple gradient

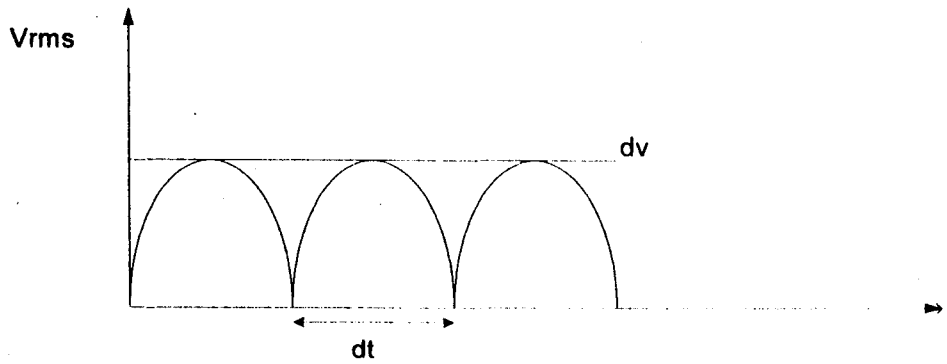


Fig 2.4b rectifier stage.

Where dv is the ripple voltage for time dt, where dt is a dependent in power supply frequency.

For an rms voltage of 15volts (from transformer)

Vpeak = 15 x √2 (i.e., rms x √2

= 21.2V

Hence letting a ripple voltage of 15% makes dv = 3.18

But $1/C = \frac{dv}{dt}$

$C = \frac{dt}{dv}$

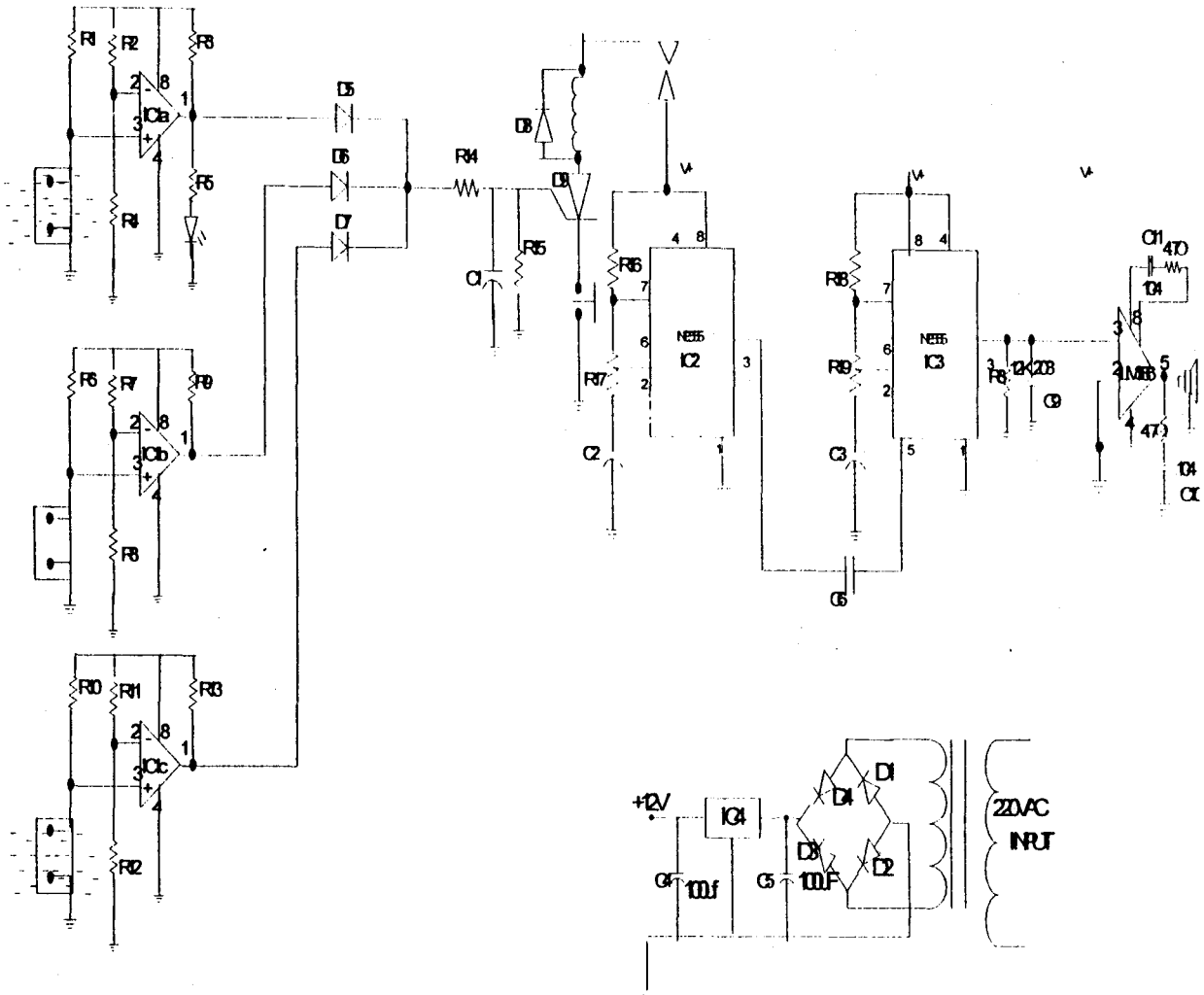
$= \frac{10ms}{3.1V}$ (where dt = 10ms for 50Hz)

$= 3225.8\mu F$

A preferred value of 3300μF was employed for the power supply stage.

A 7812Regulator was used for the 12v generation.

Fig 2.3 COMPREHENSIVE CIRCUIT DIAGRAM.



MULTI-CHANNEL WATER LEVEL INDICATOR WITH ALARM

CHAPTER THREE

TESTING AND CONSRUCTION

3.0 TESTING

The physical realization of the project is very vital. This is where the fantasy of the whole idea meets reality. The designer will see his or her work not just on paper but also as a finished hardware.

After carrying out all the paper design and analysis, the project was implemented and tested to ensure its working ability, and was finally constructed to meet desired specifications. The process of testing and implementation involved the use of some equipment stated below.

(I) BENCH POWER SUPPLY: This was used to supply voltage to the various stages of the circuit during the breadboard test before the power supply in the circuit was built. Also during the soldering of the project the power supply was still used to test various stages before the d.c power supply used in the project was finally constructed.

(ii) OSCILLOSCOPE: The oscilloscope was used to observe the ripples in the power supply waveform and to ensure that all waveforms are correct and their frequencies are accurate. The waveform of the comparator and oscillator (stages) were checked.

DIGITAL MULTIMETER: The digital multimeter basically measures voltage, resistance, continuity, current, frequency, temperature and

transistor life. The process of implementation of the design on the board required the measurement of parameters like, voltage, continuity, resistance values of the components and in some cases frequency measurement. The digital multimeter was used to check the various voltage levels, power supply voltage in this project. And also, to test the various voltages levels during the testing and implementation.

3.1 IMPLEMENTATION

The implementation of this project was done on the breadboard. The power supply was first derived from a bench power supply in the school electronics lab. (To confirm the functionality of the circuits before the power supply stage was soldered).

Stage by stage testing was done according to the block representation on the breadboard, before soldering of circuit commenced on Vero board. The various circuits and stages were soldered in tandem to meet desired workability of the project.

For proper understanding of how the system operates and allow for troubleshooting, the pin configuration of the IC's and other active components used are shown below. Fig 3.1a shows the pin out of the LM 339 which was used as a comparator in this project.

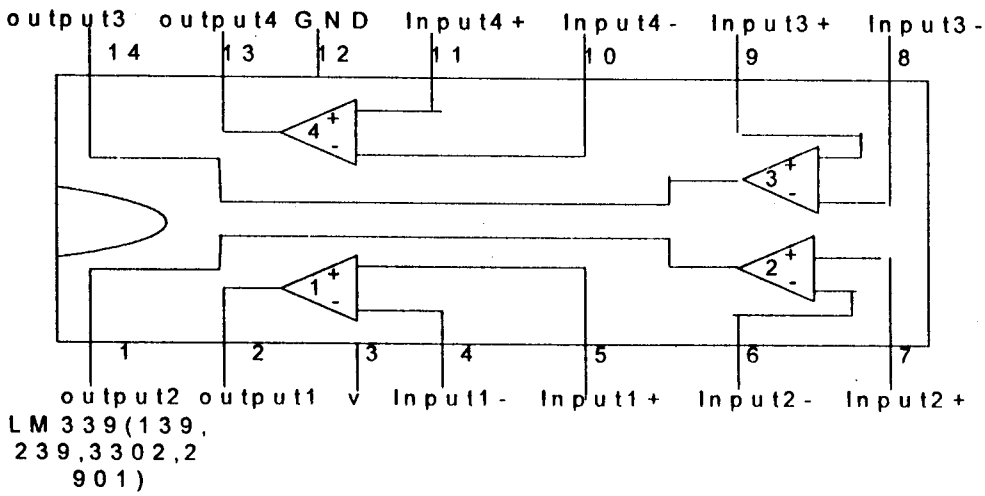


Fig 3.1a LM 339 Pin Configuration.

CONSTRUCTION

The construction of the project was done in two different stages. The soldering of the circuits and the coupling of the entire project to the casing.

The soldering of the project was done on a Vero- board. The Vero board contains the power supply, and the comparator stages.

Appendix III shows the soldering and component arrangement on the Vero board.

The second phase of the project construction is the casing of the project. This project was coupled to a metal casing. The casing material being wrought metal designed with special perforation and vents. It is diagrammatically represented in appendix IV

3.3 PROBLEMS ENCOUNTERED

1. The response of the transceiver is not linear, although the op amp was varied to give the best possible response.

2. There was electrical noise which affected the performance of the system but was removed by using a filter capacitor.

3. Other problems include soldering and measurement errors but these problems were solved by proper troubleshooting serious care in the construction of the project.

CHAPTER FOUR

CONCLUSION AND RECOMMENDATIONS

4.0 CONCLUSION

The project which is the design and construction of a multi-channel water level detector was designed considering some factors such as economy, availability of components and research materials, efficiency, compatibility and portability and also durability. The performance of the project after test met design specifications.
The design of a multi -channel water level detector Involved research in both digital and analog electronics. Intensive work was done on op-amps, comparators and other electronic circuits.

4.1 RECOMMENDATIONS.

I would recommend that further work be done on the following areas. This would be possible if the department procures state of the art equipments required to make it possible for the students to carry out such research.

1) The department should acquire more research-oriented books in the departmental library, to make enough materials available for students to use.

2) Research should be done to make the device resets automatically once there is no more water in the tank without resetting it manually.

3) The department should acquire more research-oriented books in the departmental library, and also hard to get components in the school laboratory to make enough materials available for students to use.

REFERENCES

CLAYTON HALLMARK
IC COOKBOOK (Pin configurations of all the IC's)
Mc-GRAW-HILL BOOK COMPANY, 1986

ECG DATA BOOK 1999 EDITION
(GENERAL DATA SHEETS FOR ALL COMPONENTS).

EVERYDAY ELECTRONICS JOURNAL
MAY-1998 EDITION (power supplies)

GEORGE LOVEDAY
ESSENTIAL ELECTRONICS (general references).
Published by PITMAN (1984)

JACOB MILLMAN
MICRO ELECTRONICS (general references)
McGraw-HILL BOOK COMPANY (1979).

LUECKE G
J.P MIZE AND W.N CARR.
SEMICONDUCTOR MEMORY DESIGN AND APPLICATIONS
(chap.3&4, general references)
McGraw-HILL BOOK COMPANY, 1973.

RJ MADDOCK & DM CALCUTT.
ELECTRONICS COURSE FOR ENGINEERS. (pages 341-349,).
Published by LONGMAN (1994).

ROBERT L. BOYLESTAD
LOUIS NASHELSKY
ELECTRONICS DEVICES and CIRCUIT THEORY (eighth edition)
Published by PRINCE-HALL (2002).

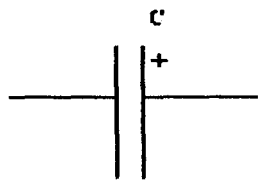
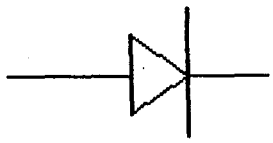
TOM DUNCAN
SUCCESS IN ELECTRONICS (pages 44-75, other passive components, 107-119, op-to devices).
Published by LONGMAN (1983).

V.K MEHTA
PRINCIPLES OF ELECTRONICS (general references) Published by S.CHAND & COMPANY LTD. (2003).

APPENDIX

Appendix I

(Schematic representation for passive components)

Symbol	Description
	Resistor
	Capacitor
	Inductor
	Diode

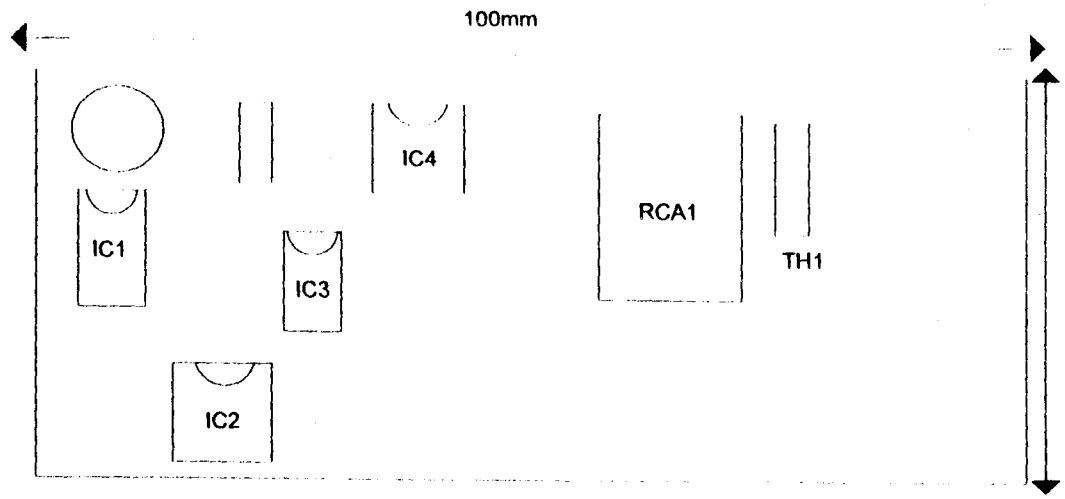
Appendix II

COMPONENT LIST.

R1 & R2	IMΩ
R2 & R2	1K
R4 & R8	2.2K
R3, R9, & R13	1K
R14	1.5K
R15	470Ω
R16, & R17	10K
R18	10K
R19	100K PRESET
R20	1K
D1-D7	IN4001
C1	100µF
C2	10µF
C3	10µF
C4	100µF
C5	1000µF
C6	10Nf
IC1	LM339 (quad comparator)
IC2 & IC3	NE555
IC4	7812

Appendix III

COMPONENT ARRANGEMENT ON THE VERO BOARD.



IC1 - LM339

IC2 & IC3 - NE555

IC4 - LM386

IC5 - 7812

TH1 - 2P4m

Appendix IV

ISOMETRIC VIEW OF CASED JOB WITH DIMENSIONS.

