DEVELOPMENT OF LOCUST BEAN PROCESSING PLANT (DESIGN OF LOCUST BEAN WASHER AND CONSTRUCTION, PERFORMANCE EVALUATION OF LOCUST BEAN COOKER).

BY

MOHAMMED, YEMI SULAIMAN
2001/13849EA

BEING A FINAL YEAR PROJECT SUBMITTED IN PARTIAL FULFILMENT FOR THE AWARD OF BACHELOR OF ENGINEERING (B.ENG) AGRICULTURAL ENGINEERING

DEPARTMENT OF AGRICULTURAL ENGINEERING
FEDERAL UNIVERSITY OF TECHNOLOGY, MINNA, NIGER STATE.

NOVEMBER, 2006.

DECLARATION

I hereby declare that this Project is a record of a research work that was undertaken and written by me. It has not been presented before for any degree or diploma or certificate at any University or Institution. Information derived from personal communications, published and unpublished works of others were duly referenced in the text.

Mohammed, Yemi Suleiman

14-11-06

Date

CERTIFICATION

This project entitled Design of a locust bean washer and construction of a locust bean cooker Mohammed, Yemi Sulaiman meets the regulations governing the award of the degree of Bachelor of engineering (B. ENG.) of the Federal University of Technology, Minna, and it is approved for its contribution to scientific knowledge and literary presentation.

Engr. Dr M. G. Yisa — 02/11/2006

Project supervisor — Date

External Examiner — 02/11/2006 Date

Engr. Dr (Mrs.) Z. D. Osunde — 15/11/2006

Head, Department of Agricultural Engineering. — Date

DEDICATION

This Project is dedicated to my Late Father, Alhaji J. A. Mohammed, my Mother, Madam Afusat Mohammed, my Grand Mother, Madam Asummau Tojola Mohammed and to the entire family.

ACKNOWLEDGEMENT

Firstly, I am grateful to Almighty God who has made all things possible.

I especially wish to record my profound gratitude for the continued encouragement and support, which I received from my supervisor, Engr. Dr. M. G. Yisa during the course of this work. And also to my H.O.D. Engr Dr. (Mrs). Z. D. Osunde, Level adviser, Engr. Dr. O. Chukwu, Prof E. S. A. Ajisegiri, , Engr. Solomon Dauda and all the Lecturers of Department of Agricultural Engineering.

My sincere appreciation also goes to the entire family of Alhaji and Alhaja Oyinloye for their support and love throughout my stay in the University.

Acknowledgement and thanks are due to the family of Alhaji and Alhaja A. A. Yusuf (SP), Alhaji and Mrs Bashiru Jimoh, Mr. Wasiu Usman for their moral and financial support in my academic life and beyond.

My appreciation and thanks goes to my Boss, Mr. Brian Bradly and entire members and staff of Bigen Africa Offshore (Nig.) Limited for always being there when it mattered most. Also to Alhaji S. O Yusuf , Alhaji Moshood Bakare , Alhaja Abibat Adeoti and family who have been actively engaged in the development of my Project work. May God reward you accordingly. [Amen].

I am indebted to many of my friends, especially Banjo , Temitee, Mayor, Kyo, Dotun, Osisienato, Joel, Ogunfunlayo, Wasiu, Lukman, Henry, Tunde Kunle, Segun for their close co-operation and constructive criticism, their inclusive contribution in no small way to the success of this Project.

Also to my brother, Mr. Biodun Mohammed, Lateef Mohammed, Moronike Mohammed, my Cousins, the Oyinloyes, Mohammeds, for their love and support.

ABSTRACT

This project report deals with the development of locust bean processing plant to mechanize the existing traditional method of locust bean production to reduce drudgery, time wasting and increase output. It contains design analysis, calculation and design drawing of the washing aspect of the processing plant to guide in construction of the washing machine. Further more the project includes the construction of locust bean cooker done using readily available material in the market. The machine was tested and found to be effective, easy to maintain and replacement of parts can be done with ease.

TABLE OF CONTENT

Title page

Declaration ii

Certification iii

Dedication iv

Acknowledgement v

Abstract vi

Table of content vii

List of table x

List of figure xi

CHAPTER ONE

1.0 Introduction **1**

1.1 Locust bean variety 1

1.2 Locust bean utilization 1

1.3 Local processing of locust bean 2

1.4 Aims and objectives 2

1.5 Scope 2

1.6 Justification 2

CHAPTER TWO

2.0 Literature review **3**

2.1 The need for cleaning agricultural product 3

2.2 Cleaning principle and procedure 3

2.2.1 Dry cleaning 3

2.2.2 Wet cleaning 4

2.3 History of washing machine 7

2.4 Existing washing machine 8

2.5 Previous methods of washing locust bean 9

CHAPTER THREE

3.0 Locust bean washer design, analysis and calculations 11

3.1 Preambles 11

3.2 Design consideration 11

3.3 Assumption 11

3.3.1 Volume of outer cylinder 12

3.3.2 Volume of inner cylinder 13

3.3.3 Mass of washing brush 13

3.4 Power requirement 15

3.5 Motor selection 18

3.6 Belt selection 18

3.7 Analysing the power transmission shaft 18

3.8 Diameter of the shaft 24

3.9 Bearing selection 25

3.10 Hopper design 27

CHAPTER FOUR

4.0	**Construction of locust bean cooker**	**29**
4.1	Material selection	29
4.2	Machine fabrication procedure	29
4.3	Cost analysis	31
4.4	Performance test	32
4.5	Operational principle	38
4.6	Results and discussions	38
4.7	Machine maintenance	39

CHAPTER FIVE

5.0	**Conclusions and recommendations**	**40**
5.1	Conclusions	40
5.2	Recommendations	40
REFERENCES		42

LIST OF TABLES

Table		Page
1	Machine fabrication procedure	30
2	Standard component used	31
3	Material cost analysis	31
4	Result obtained from performance test	33
5	Result obtained from cooked locust bean	35

LIST OF FIGURES

Figure		Page
2	Schematic diagram of water spray	4
3	Schematic diagram of rotary drum washer	5
4	Schematic diagram of rotary brush washer	6
5	Assumption diagram of washer	12
6	Dimension of brush plate	13
7	Bending moment analysis	19
8	Graph of temperature against time for performance test	36
9	Graph of temperature against time for cooked locusts bean	37

CHAPTER ONE

1.0 INTRODUCTION

A nation is known by its scientific and technological development, also the advancement and wealth of any nation is basically based on its technology and it's almost determined by the variety, quality and quantity of the manufactured goods she possessed for her use and for exportation to other countries.

1.1 Locust bean variety

The Africa locust bean tree "*parkia biglobosa*'' is a perennial tree legume which belongs to the sub-family *mimonsondial* and family *leguminisae*. It grows in the savannah region of West Africa up to the southern edge of the sahel savannah zone 13°N(Campbell-platt,1980).These trees are not normally cultivated but can be seen in population of two or more in the savannah region of Nigeria. It is called in various Nigeria languages *"iru*" (Yoruba*);"DawaDawa*" (Hausa) and"*Ogiri*" (Ibo).

1.2 Locust bean utilization

The tree plays vital ecological role in cycling of nutrient from deep soil by holding the soil particles to prevent soil erosion with the aid of its roots. The tree also provides shades for farmers (Campbell-platt, 1980).It is used as a timber for making pestle, mortar, bows and hoe handles. They are a valuable and reliable source of food especially the seed which serves as a source of useful ingredient for consumption (Campbell-Platt, 1980).Also is has been reported that the husk and pods are good food for livestock. It contributes significantly to the intake of protein, essential amino acids, fatty acids and B-vitamins particularly riboflavin (Fetuga *et al.,* 1973. Cambell-platt, 1980).

1.3 Local processing of locust bean

The shelling of the pod and removal of the pulp to obtain the seed for boiling and fermentation are the most laborious of all the processing steps in the local production of "iru" .At moment, the shelling is done manually with splitting of individual pods to remove the pulp containing the seed. The pulp is then dissolved in water and washed off by using bare hand to agitate it. It is labour intensive and time consuming.

1.4 Aims and Objectives

The of aim of this study is to mechanize the washing of the pulp to expose the seeds of the locust bean.

The Objectives of this study are to

1. To develop locust bean processing plant
2. To design a locust bean washer.
3. To construct and carry out a performance evaluation of the locust bean cooker.

1.5 Scope

This work covers the design calculation and drawing of a locust bean washer and construction of locust bean cooker.

1.6 Justification

Locust bean tree is found almost in all part of the country, and washing of the locust bean itself is being done by rural women in the village. Yet the full utilization of the bean has not been achieved despite its economic importance .Therefore the project aims at designing and fabricating a simple equipment which can effectively wash the pulp from the seed of locust bean without much constraint with high efficiency of production and less time required. This project is therefore justified.

CHAPTER TWO

2.0 LITERATURE REVIEW

2.1 The need for cleaning agricultural product

Cleaning is the removal of foreign or dissimilar materials. In agricultural production, after harvesting it is the first step that should be taken prior to further processing. It is usually done by washing, hand picking or screening (Chukwu, 2003). Different types of equipment are available for cleaning of seeds ranging from simple to complex and highly sophisticated equipment. Agricultural product cleaning equipment work on the basis of some physical properties of the product which include, size, weight, moisture content, texture, colour, affinity for liquids, shape etc.

Cleaning process can be accomplished by using any simple equipment or a combination of machine taking into consideration one or a combination of the properties mentioned above. According to Kachru (1989), the sequence for removing contaminating material will depend upon: kind of seed being cleaned, nature of foreign matter, quantity of each in the total material and desired quality standards.

2.2 Cleaning principle and procedure

Cleaning of agricultural product can be classified into dry cleaning and wet cleaning.

2.2.1 Dry cleaning: This method is used for agricultural product that are smaller, have greater mechanical strength and posses lower moisture content for example grain and nuts. It usually involves smaller, cheaper equipment than wet cleaning. The equipment uses for dry cleaning of agricultural product are air clarifier, magnetic separator, separation based on screening of food, physical separator.

2.2.2 Wet cleaning. This is more effective than dry cleaning for removal of soil from crop and it causes less damage to food than the dry cleaning.

The effectiveness of wet cleaning is determined by the availability of clean water which helps in the removal of foreign matter (dirts, dust, lighter particle etc) from the produce. According to Henderson and Perry (1980).The different principle used in the washing operation are as follows.

(a) Soaking. When the surface of a product is covered by dirt that can be easily removed, it is soaked into still or moving water and allowed for a whole and then removed, vegetable and fruits are mostly cleaned by this method.

(b) Water sprays. For firmly attached dirts, water spraying is used to remove the dirts. In this, water jets are directed towards the product which may be piled in water baths. The sprays can be varied from low-pressure wide angle to very high pressure directed jets. Though this method is suitable for most products, the intensity and type of spray must be selected in order not to damage products.

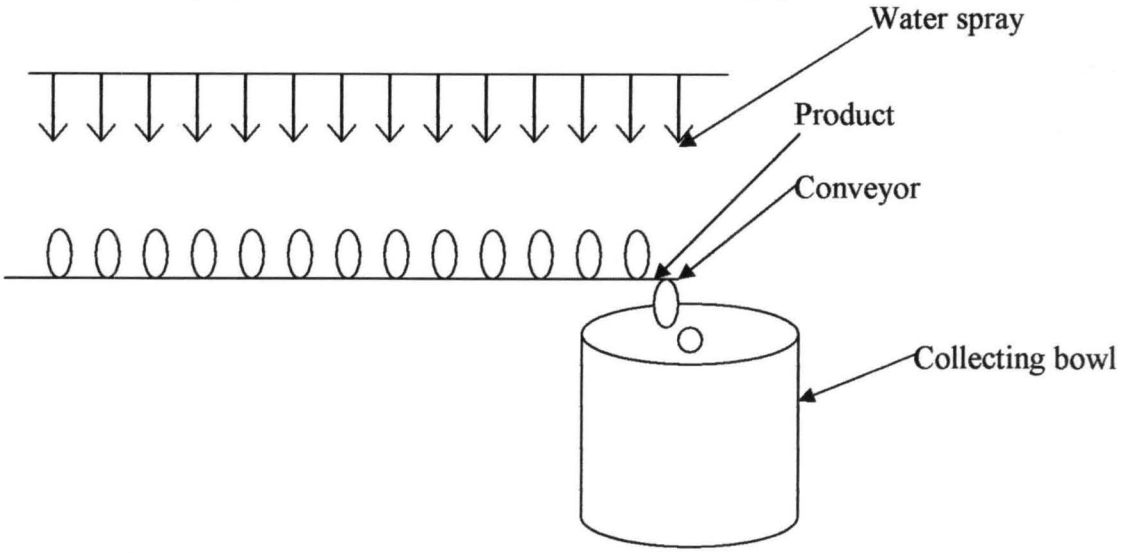

Fig. 2: Schematic Diagram of Water Spray

(c) Rotating drum washer. This is the most commonly used type of washer, it is simple in operation, has high washing capacity with high efficiency coupled with minimum damage.

It is used in commercial scale. It is used either in a bath of water or filtered with spray nozzles.

The inside of the drum is fitted with screw slots over which the products are screwed as the drum rotates. As the product is screwed through jets of water are directed to it until it gets to the other end. Below shows a schematic representation of a rotary drum washer.

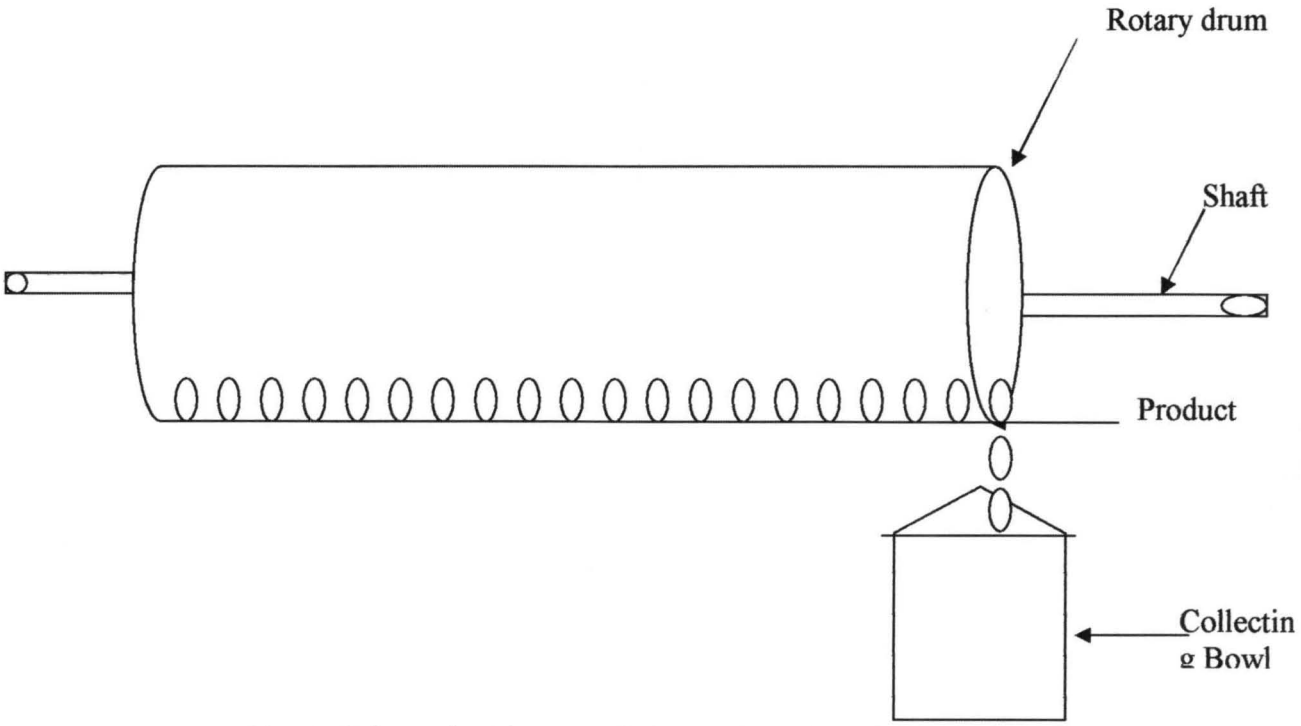

Fig. 3: Schematic Diagram of Rotary Drum Washer

(d) Rotating brush washer. Brushes made of fiber, rubber, sponge can be fitted as rotating shaft to rub over the surface of products which can be in water bath to wash.

Rotating brushes are effective for removing sandy or loamy soil and spray residue. The washing time is controlled by the relative motion of the brushes which move the products through a definite path.

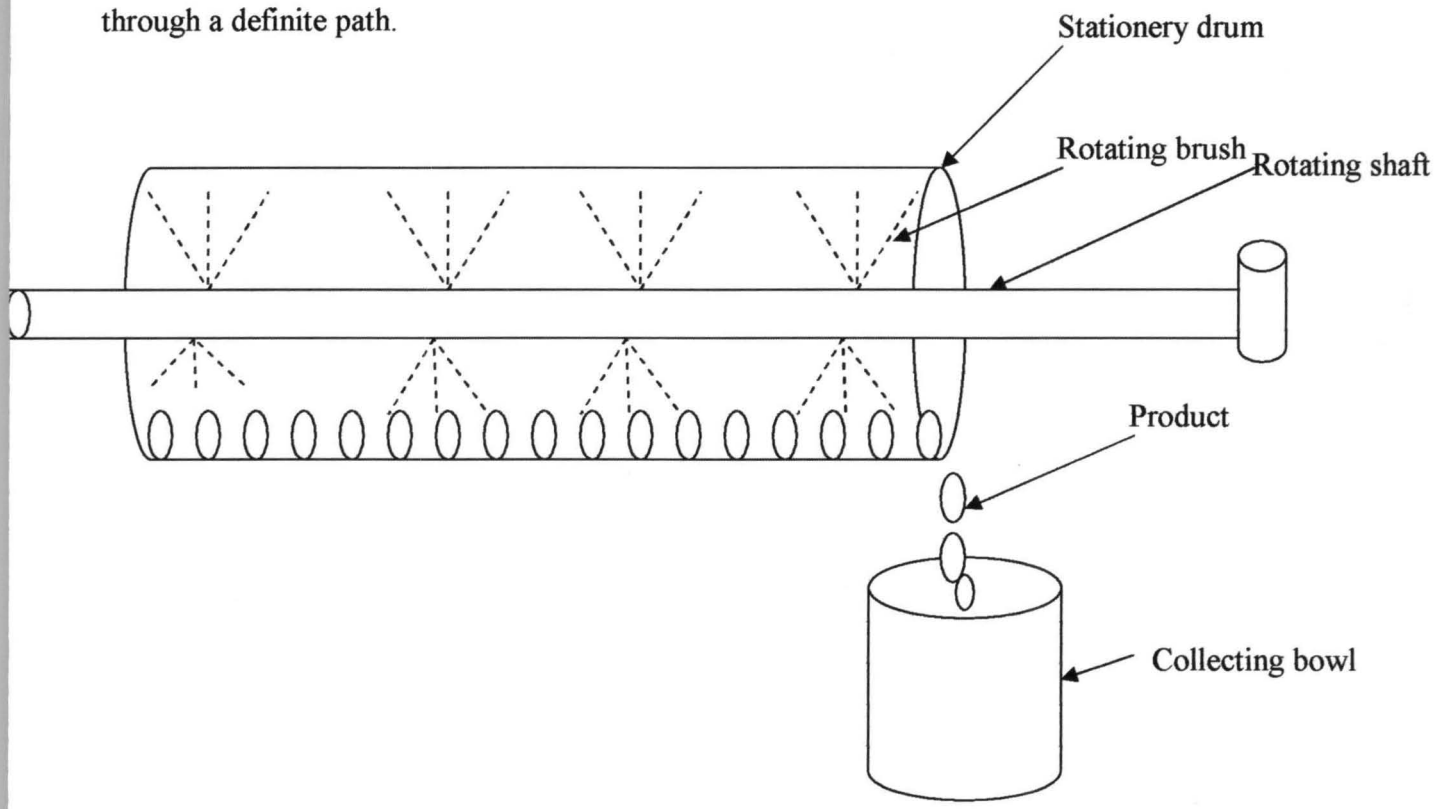

Fig. 4: Schematic Diagram Rotating Brush Washer

(e) Shuffle or shaker washer. Cleaning in these washers is achieved by vigorously reciprocating motion. This type of washer is usually ruggedly constructed and adequately maintained to minimized interruption. Shuffle washers are complex in nature and design and they are quite expensive because of its vigorous motion. It is not suitable for washing perishable products. Usually the shuffle washer incorporated a number of operations along the washing time. Raw products are fed from one side and as the products flow through the line both washing, elevation and evaporative drying can take place. In this plan , spray residue can be

removed from fruits by washing with detergent solution with a 0.5-1.0% hydrochloric acid solution at a 70°F (21.1°C) immersed in water for about 3 minutes for heavier stain. They could be left for a longer period.

2.3 History of washing machine

The introduction of washing machine began in 18th century. A mechanically operated machine was invented by Hamilton (1858) of Pittsburg, Pennsyhania, Sybil, (1993) The washing machine he was using in is home was operated by turning a crank that rotates paddles on a vertical shaft inside a tube filled with water and cloth.

However, there was not much success on this machine and other early ones because it required tiresome hard operation. Before and after the 19th century a family home washing machine was fabricated manually by using a water filled wooden tube, a corrugated wash board and a rubber-roller wringer.

The first electrically powered washing was invented by Alva (1910) and manufactured in Chicago. By word war 1, several electric washing were available which did not gain a sizeable market until 1920 s. The agitator types washing machine was invented by Awards(1922) this was made in Nauston, Iowa which gained immediately wide spread favour.

The manually operated washing machine is the most popular, simple and easily constructed. The user open the lid at the base of the hopper, load the material to be wash in the perforated drum and set the shaft. The water pump or reservoir is filled with water at selected water level. The washing action is accomplished by beaters and tinned brushes that are mounted on the shaft that is rotating inside the perforated drum. The beater bears the seed clod into individual sealing while the brushes remove the pulp.

that are mounted on the shaft that is rotating inside the perforated drum. The beater bears the seed clod into individual sealing while the brushes remove the pulp.

The brushes under the rotating action of the shaft create strong water current in the perforated drum that deep in the water sump forcing the water through the whole side of the cylindrical drum. Also due to the frictional forces that exist between the brushes-seed and drum interface the washing action continues.

2.4 Existing washing machine

In the course of research on this project the following types of washing equipment used for agricultural product were identified.

(a) Melon washer. The melon washer found in existence was developed by the National Center for Agricultural Mechanization (N C A M), Ilorin. The NCAM melon washer which is manually operated consist of a water trough, a stationery perforated drum, which is semi immersed inside trough and a shaft with brushes and spikes attached to it which passed through stationery perforated drum where the main melon washing process takes place (washing chamber) through the rotation of the shaft. The decay melon pod is fed into washing chamber through a hopper situated on top of the stationery perforated drum. A frame and stand made of angle iron was used to hold the entire system in a static position for easy operation. The working principle of NCAM melon washer is brush washing principle. That is a rotary assembly of brushes with spikes are passed through a stationery perforated drum wholly immersed in water trough .The melon is fed into the stationery perforated drum through the hopper with water already inside the water trough. The water in the trough passes through the perforated hole in the stationery drum. The spikes helps in loosening the

decay melon pod which the brushes are used to washed the melon by rubbing the melon pods against the wall of perforated drum. The rubbing action is possible because of the clearance of the brushes and spikes from the wall of the cylinder are made so small as to help to increase efficiency of the washer. The washed melon seed are to discharge from the washer by raising one of the ends of perforated drum up for the washed melon seed to be collected at the other opening end of the drum while the water is discharged through the water outlet at the bottom of water trough.

(b) The potato tuber washer: The potato washing equipment being discussed in this work was developed by the International Potato Center (C I P) in Peru. According to Intermediate technology publication and United Nations Development Fund for Women (UNIFEM) 1993, the CIP manually operated potato washer is constructed from a 250 litres of oil drum, cut length wise and paddle well equipped with brushes are fixed to an axle with wooden dowels. A handle is fixed to the axle in order to rotate the paddle and so agitate the potatoes. The washer has a capacity of 250kg of potatoes batch and require 150 litres of water per batch, after a few minutes the drum is turned on its side to empty the potato and dirty water discharge.

2.5 Previous method of washing locust bean

As a necessity, the local farmers over the years washed their locust beans tissue in stream, pond, and lakes or sometimes in reservoirs near their home. The washing is effected by pouring the locust bean in baskets immersed in the water and shaken vigorously for sometime with occasionally hand shuffling to effect washing. This method is very crude, time consuming and laborious.

Advantages of traditional method

1. It is very cheap.
2. It does not involve technical know-how.

Disadvantages.

1. It is labour intensive and energy sapping.
2. It is boring.
3. It leads to loss of reasonable quantity of locust bean.
4. Large quantity of locust bean cannot be washed in a day.
5. It is time consuming.

The production of locust bean is on the increase within our community due to its economic importance. It is not an over statement to say that the locust bean "iru" production had received a boost within the last few years. The construction in this project will eliminate loosely and firmly attached dirt's on the seed and will definitely improve the market value of the produce.

It will also help to removed the problem involved in traditional washing such problem include loss of crop seeds, drudgery. The project will also minimize loss of time, make the operation more efficient and reduce fatigue. Also the operation of the machine is very simple as it can be carried out by the farmer in rural areas and materials used for the construction are readily available incase of any repair.

Hence in the design of locust bean washer the principles of wet cleaning using the rotating drum washer and rotating brush washer which was earlier discussed shall be considered.

CHAPTER THREE

3.0 LOCUST BEAN WASHER DESIGN ANALYSIS AND CALCULATION

3.1 Preamble

The locust bean washer was designed based on two concentric cylinders.

3.2 Design considerations

The following factors were considered during the design of the locust bean washer.

(a) The slurry from the washed beans is required to be collected as a by-product separated from the bean seed by the machine for the production of juice.

(b) The machine is a food processing unit which requires hygienic and non corrosive material for construction e.g. stainless steel, galvanized mild steel, etc.

(c) Throughput. The machine was required to give an output of 100kg per hour.

(d) Leakages must be highly minimized.

3.3 Assumptions

Height of the cylinder h =500mm

Diameter of outer cylinder D1 =400mm

Diameter of inner cylinder D2 =300mm

Diameter of hole in washing brush plate =10mm

Number of hole in washing brush plate = 56

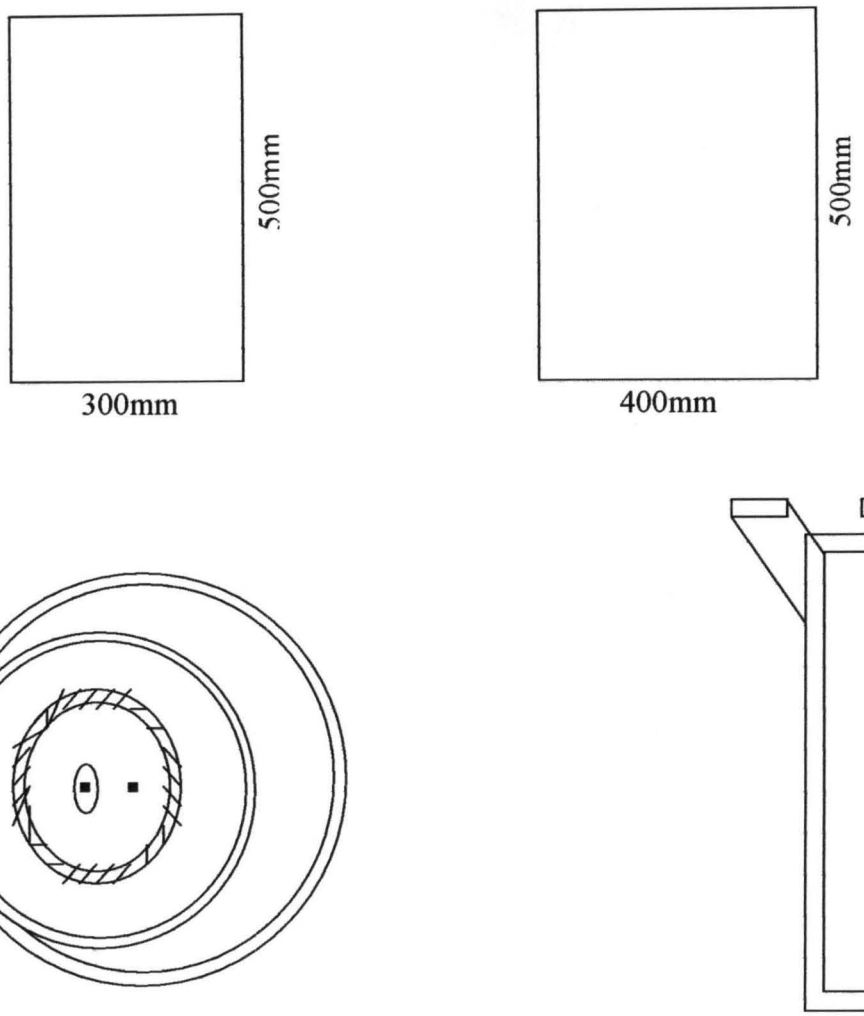

Fig. 5: Assumption diagram of a washer

3.3.1 Volume of outer cylinder

$$V_2 = \frac{\pi D_2^2}{4} xh \qquad (1)$$

where

V_2 = volume of outer cylinder (cm^3)

D_2 =diameter of outer cylinder (40cm)

h = height of the cylinder (50cm)

$$\because V = \frac{\pi 40^2}{4} X 50$$

$=62.831.9cm^3$

=62.8 litres

3.3.2 Volume of inner cylinder

$$V_1 \frac{\pi D_1^2}{4} Xh$$

were

V_1=volume of inner cylinder (cm)

D_1^2=diameter of inner cylinder (30cm)

h= height of the cylinder (50cm)

$$\because V = \frac{\pi 30^2}{4} X50$$

$=35342.9cm^3$

$=35.3liters$

3.3.3 Mass of washing brush

Area of brush plate

A=l x b .(2)

where

l=length (40cm)

b=breadth (15cm)

A=40 x 15

$=600cm^2$

$=0.06m^2$

56 holes of diameter 10mm

Area of a hole= πr^2 (3)

where

r=radius of the hole (0.005m)

A= π $(0.005)^2$

$=7.8540^{-5}10m^2$

Total area of holes = 56 x 7.6540 x 10^{-5}

= 4.3982 x 10^{-3} m^2

Area of triangular off cuts

$A=^1/_2lb$ (4)

where

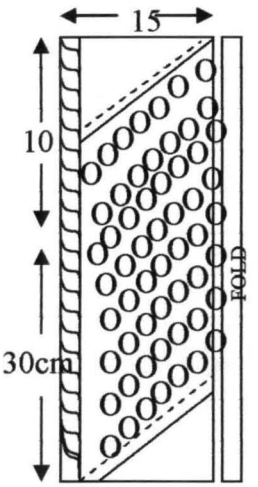

Fig. 6: Dimension of Brush Plate

L=length of triangular off cut (0.1m)

B=breadth of triangular base (0.13m)

$A=^{1}/_{2}$ x 0.1 x 0.13

$= 6.5 \times 10m^{-3} m^2$

Total area = $2 \times 6.5 \times 10^{-3}$

$=0.013m^2$

Area of brush plate = [Total area of the plate]-{[total area of triangular off cut] + [total area of holes]}

=0.06-[0.013+0.0043982]

=0.06-0.0173982

$=0.0426018m^2$

Area of one brush plate = $0.042018m^2$

∵For two brush plates = 2 x 0.042018*2

$=0.0852036m^2$

To calculate mass of brushes plate

The thickness of the brush plate is 2mm

Volume of brush plate

V = area x thickness (5)

$=0.085203 \times 2 \times 10^{-3}$

$V = 1.704072 \times 10^{-4} m^3$

Given that density of mild steel is 7840kg/m

From equation of density

$\rho = {}^{m}/_{v}$ (6)

where

ρ = density

m = mass

v = volume

$m = \rho \times v$ (7)

$= 7840 \times 1.704072 \times 10^{-4}$

=1.33599kg

3.4 Power requirement

The power require for the locust bean washing machine can be divided into three parts

(a) power required to wash (Pw)

(b) power required to drive washing brushes (Pb)

(c) power required to drive the pulley (Pp)

(a) power required to wash (Pw)

$Pw = T\omega$ and (8)

$$T = \frac{\pi D^3 t}{16} \quad (9)$$

$$\omega = \frac{2\pi N}{60} \quad (10)$$

where

Pw = power to wash (watt)

T =torque

D = diameter of washing brush assembly (0.26m)

t= shear stress of locust bean (9086.86N/m^2) Oloso (1988)

ω = Angular speed

N = rpm of washing brush (500 rpm)

$$\because T = \frac{\pi D^3 t}{16}$$

$$= \frac{\pi x 0.26^3 x 9086.86}{16}$$

$$= 31.359 \text{Nm}$$

$$\omega = \frac{2\pi N}{60}$$

$$= \frac{2x\pi x500}{60}$$

$=52.3599 \text{ rad } s^{-1}$

$\because Pw = T\omega$

$=31.359 \times 52.3599$

$=1641.959$watt.

(b) Power to drive washing brush (Pb)

$P_b = T\omega$ and $T = W_bD$ (11)

where

P_b = power to drive washing brush (watt)

T =Torque required to drive washing brush disc

W_b = weight of washing brush disc (1.33599kg)

D =diameter of washing brush disc (0.26m)

$\because Tb = 1.33599 \times 0.26$

$=0.35$

$P_b = 0.35 \times 52.3599$

$=18.19$watt

(c) Power required to drive pulley (P_p)

$P_p = Tb\omega$ (13)

$Tb = WbR$ (14)

For small pulley

W_b = mass of pulley estimated to be 0.985kg

R= radius of pulley (40mm)

$\because$ Tb = 0.985 x 40 x 10^{-3}

= 0.039408138

N = rpm (1435rpm)

$$\omega = \frac{2\pi N}{60}$$

$$= \frac{2x\pi x1435}{60}$$

=150.273 rad s^{-1}

$\because P_{pl}$ = 0.039408138 x 150.273

=5.922watt

For larger pulley

W_b = mass of pulley estimated to be 1.232kg

R = radius of pulley (100mm)

Tb = 1.232 x 100 x 10^{-3}

=0.12315

$$\omega = \frac{2\pi N}{60}$$

N = 500 rpm

$$\omega = \frac{2x\pi x500}{60}$$

$=52.3599 \text{ rad } s^{-1}$

$P_{p2} = 0.12315 \times 52.3599$

$= 6.448\text{watt}$

Total power to drive pulley

$= P_{p1}+P_{p2}$

$= 5.922 + 6.448$

$= 12.370\text{watt}$

$\because$ Power require for the locust bean machine is given by P.

$P = P_w + P_b + P_p$

$=1641.959+18.19+12.370$

$P = 1672.519\text{watts}.$

3.5 Motor selection

A 2.238kw (2hp) 1435 rpm single phase motor was considered adequately for the machine (locust bean washer) capacity. O Kobi (1977).

3.6 Belt selection

A class "A" belt was selected for the washer of low revolution per minute.

3.7 Analyzing of the power transmission shaft

- The shaft is subject to both bending and torsional loads.
- The bending load comprises of vertical and horizontal components.

- The vertical component is as a result of the weight of the pulley and brushes.
- The horizontal component is made up of the summation of tension T1and T2 on the slack and tight side respectively of the power transmission belt.

For the resultant bending and tensional moments

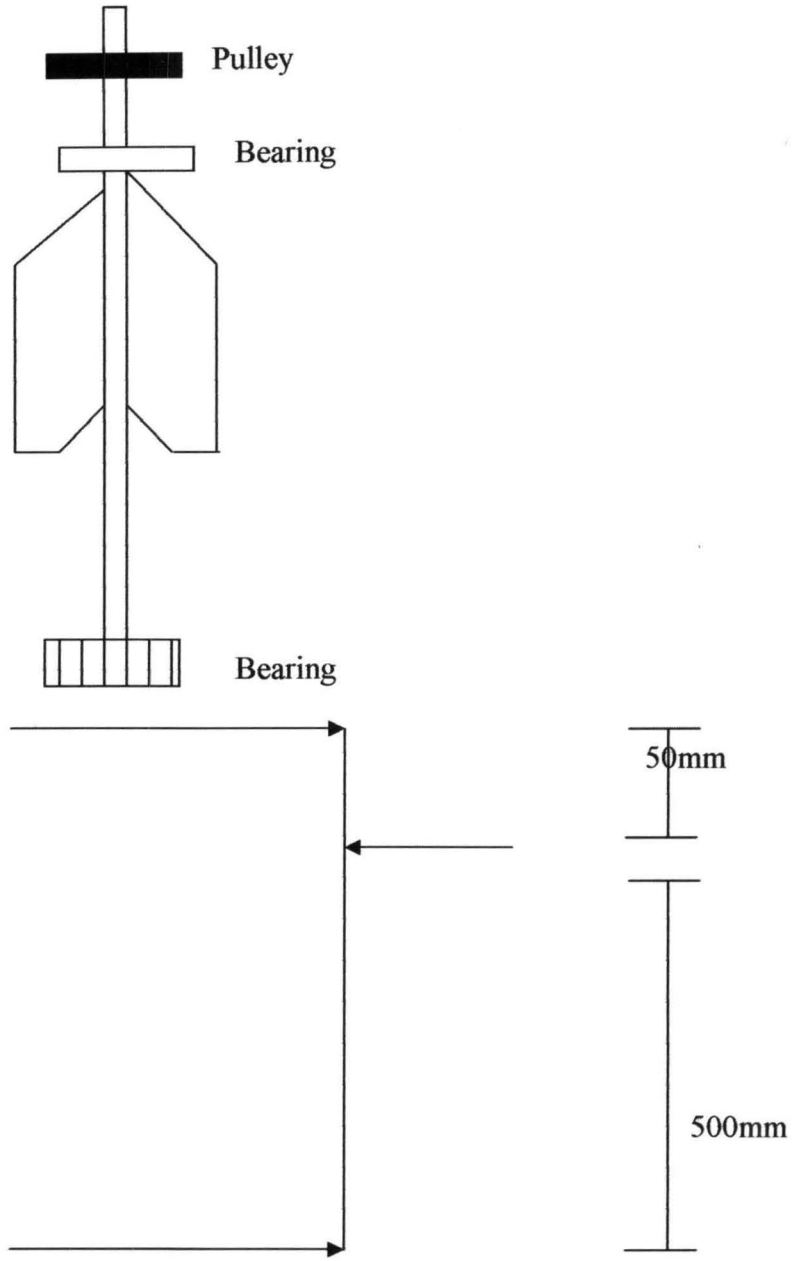

Fig. 7: Bending Moment analysis

Taking

Electric motor efficiency of 85%

$$\text{Torque} = \frac{Px9550}{rpmxe} \tag{15}$$

where

P = power of electric motor (2.238 kw)

e = efficiency (85%)

rpm = (1435)

$$T = \frac{2.238x9550}{1435x0.85}$$

= 29.788Nm.

Net driving force $F_{net} = F_1 - F_2 = T/R$ (16)

where

T = Torque

R = Pitch radius of driving pulley (40mm)

$F_{net} = T/R$

= 29.788/40 x 10

$$= \frac{29.788}{40x10^{-3}}$$

= 744.7N

Assumption

(a) The shaft is subjected to a combined bending (due to weight of rotor assembly and belt tension) and torsion only.

(b) Torque transmission is perfectly in the horizontal plane.

For maximum bending moment

The washer blade (load) is assumed uniformly distributed i.e. vertically along the axis of the driving shaft.

The net driving force fn is acting at the point "A" from the figure shown below resulting in the reaction at point "B" and "C"

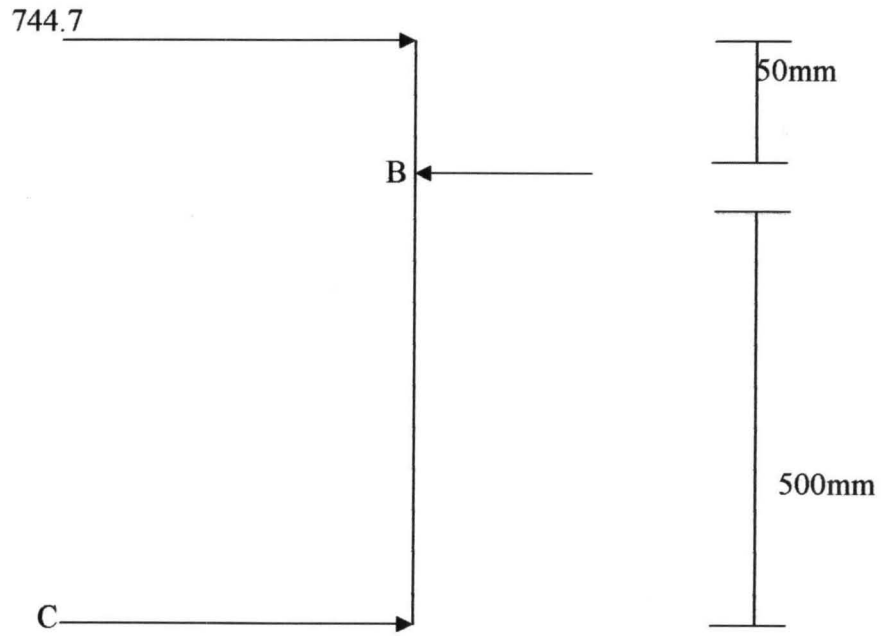

Taking moments about point c

$$\sum M_C \curvearrowleft = 0$$

$$744.7\ (550x10^{-3})\text{-}R_b\ (500 \times 10^{-3}) = 0$$

$$744.7\ (550 \times 10^{-3})\text{-}R_b\ (500 \times 10^{-3}) = 0$$

$$409.585\text{-}R_b\ (500 \times 10^{-3}) = 0$$

$$R_b = \frac{409.585}{500x10^{-3}}$$

$$R_b = 819.17N$$

$$\sum F^{+} = 0$$

$$F_{net} - R_b + R_c = 0744.7\text{-}819.17 + R_c = 0$$

$$R_c = 74.47N$$

The force reaction diagram is as show below.

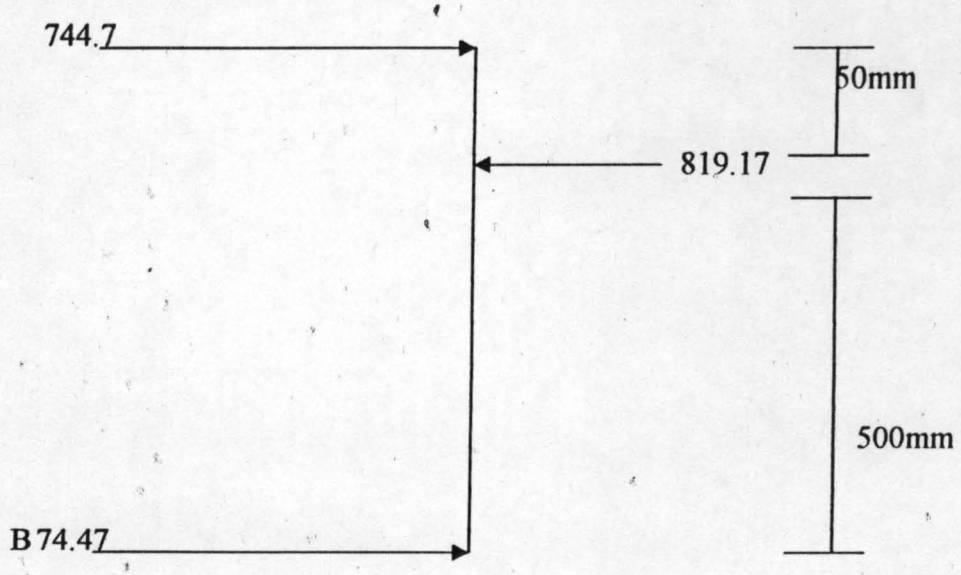

For the bending moment Mb is given by

$$M_b + 744.7\chi - R_b\left(\chi - 50x10^{-3}\right) + R_c\left(\chi - 550x10^{-3}\right) = 0$$

$$M_b + 744 - 7\chi - 819.17(\chi - 0.05) + 74.47(\chi - 0.550) = 0$$

$$M_b = -74.7\chi + 819.17(\chi - 0.05) - 74.4(\chi - 0.55) = 0$$

At point x = 0

From point A

when x = 0 M_a=-744.7

$M_a = 0$

From point B

when x = 0.05

M_b =-744.7x-819.17(x-0.05)

= -37.235Nm

From point C

when x =0.55

M_c =-744.7x+819.17(x-0.05)-74.47(x-0.55)

$M_c = 0$

. The maximum bending moment (M_b) is 37.235Nm at point B.

Torsional moment (M_t) = (f_1-f_2) R for belt drive

$$=F_{net} \times R \qquad (17)$$

where

F_{net} =744.7

R = radius of smaller pulley (400mm)

M_t =744.7 x 40 x 10^{-3}

=29.788Nm.

3.8 Diameter of the shaft

From the formula

$$d^3 = \frac{16\left\{(K_b M_b)^2 + (K_t M_t)^2\right\}^{1/2}}{\pi Ss} \qquad (18)$$

where

Ss = Allowable combined shear stress for bending and torsion for steel shaft with keyway (40 x 10^6 N/M^2)

K_b =combine shock and fatigue factor applied to bending moment. (1.5 to 2.0 for minor shock)

K_t =combined and fatigue factor applied to torsional moment (1.0 to 1.5 for minor shock)

M_b = maximum bending moment (37.235Nm)

M_t =maximum torsional moment (28.788Nm)

Then substituting the values in the equation above

$$d^3 = \frac{16\left\{(2x37.235)^2 + (1.5x28.788)^2\right\}^{1/2}}{\pi x40x10^6}$$

$d^3 = 0.00001096$

$d = \sqrt[3]{0.00001096}$

d =0.0221m

= 22.21mm

∵ Shaft diameter = 22.21mm

25mm is selected for the shaft diameter.

3.9 Bearing Selection

In bearing selection for machines some factors such as operation condition for the bearing, area of application, life factor (lf), load and speed of rotation of the coupling part are point to consider.

The life of bearings is largely determined by testing of the manufacturers and it is known to vary inversely with the power of the applied load.

For the bearing fatigue life, given that the bearing operates under favourable conditions of maintenance, proper utilization and lubrication, the life of the bearing will attain and even exceed its optimal life.

$$L = \frac{16667 x \alpha_1 x \alpha_2 x \alpha_3}{N} \left[\frac{FBxCE}{P} \right]^3 \text{ hr} \qquad (19)$$

But in considering a single row bearing as we have selected for the washing machine a1, a2, a3 can be considered equal to 1 which reduces the equation to

$$Ln = \frac{16667}{N} \left[\frac{CE}{P} \right]^3 \text{ hr} \qquad (20)$$

where

Ln = life in hours

CE = extended basic dynamic load rating for the radial ball-bearing in Newton's

FB = Dynamic load rating adjustment factor for number of adjacently mounted bearings.

a_1 = Life adjustment factor for reliability.

a_2 = Life adjustment factor for ball-bearing material.

a_3 = Life adjustment factor for application condition.

N = Operating speed.

P= Equivalent radial load on bearing (Newton's)

The selected bearing was S6254 sealed bearing with a bore of 25mm diameter .this selection fits into application conditions and shaft diameter.

Calculating the bearing fatigue life from the equation

$$Ln = \frac{16667}{N}\left[\frac{CE}{P}\right]^3$$

where

CE = 22201bs=9868.355N

P = 819.17N (for bearing at point B)

N = 500rpm

$$\therefore Ln = \frac{16667}{500}\left[\frac{9868.355}{819.17}\right]^3$$

Ln = 58277.3 Hours.

For bearing at point C,

P=74.47N

$$\therefore Ln = \frac{16667}{500}\left[\frac{9868.355}{7447}\right]^3$$

$= 4.2 \times 10^{20}$ hr

3.10 Hopper design

The hopper analysis was made using Johansson equation for mass flow for coarse particles > 500 microns in diameter.

i.e. $$\dot{M} = \rho A\sqrt{\frac{Bg}{2(1+M)Tan\theta}} \qquad (21)$$

where

θ =semi included angle of the hopper.

$\dot{M}$ =Discharge rate Kg/seconds.

ρ =Bulk density (Kg/m^3)

g=Gravity (9.807m/s^2)

B= Width of hopper outlet.

Area "A"=WL

L=length of hopper outlet.

From the equation above

Rearranging we have,

$$A = \dot{M} \Big/ \rho\left(\frac{Bg}{2(1+m)Tan\theta}\right)$$

Given that

$\dot{M}$ =100kg/hr =0.02778kg/ Sec

ρ =590kg/m^3

B=100mm

θ=20^0

$$\because A = 0.02778/590\left[\frac{0.1\chi 9.807}{2(1+0.02778)Tan20}\right]$$

$$= \frac{0.02778}{4108.7}$$

$$= 6.76 \times 10^{-3}\ m^2$$

Since A= WL (22)

And w=0.1m

$$L = \frac{A}{W} = 0.0676m$$

Table 1: Machine fabrication procedure

Component	Fabrication procedures	Machine or tools used
Boiler Shell	1. Measure out dimension on Galvanized sheet 1,220mm x 1220mm	Steel tape
	2. Mark out measured dimension on Galvanizes sheet.	Try-square and scriber
	3. Cutting of Galvanized sheet to marked out lines.	Tin-snip
	4. Rolling of the sheet into cylindrical shape	Rolling machine
	5. Joining cylinder to Delivery Valve	Hammer and Anvil
	6. Connection of heating elements.	Drilling machine
	7. Drilling of pipe hole on tank.	Bolt and Nut
	8. Connect pipe to Inner casing	Drilling machine
	9. Connect pipe to boiler shell	
Inner Casing	1. Measure out dimension on Mild sheet 1,220mm x 2480mm	Steel tape and Try-square
	2. Mark out measured dimension on Mild sheet.	Scriber
	3. Cutting of Mild sheet to marked out lines.	Tin-snip
	4. Rolling of the sheet into cylindrical shape	Rolling machine
	5. Joining cylinder to Delivery Valve	Hammer and Anvil
	6. Drilling of pipe hole on tank.	Drilling machine
	7. Connect pipe to boiler shell	Bolt and Nut
	8. Connect pipe to outer casing	Drilling machine
Outer Casing	1. Measure out dimension on Mild sheet 1,220mm x 2480mm	Steel tape and Try-square
	2. Mark out measured dimension on Mild sheet.	Scriber
	3. Cutting of Mild sheet to marked out lines.	Tin-snip
	4. Rolling of the sheet into cylindrical shape	Rolling machine
	5. Joining cylinder to Delivery Valve	Hammer and Anvil
	6. Drilling of pipe hole on tank.	Drilling machine
	7. Connect pipe to Inner casing	Bolt and Nut
	8. Setting fibre-glass	Drilling machine
Square Bar (frame)	1. Measure out the dimension on a mild steel sheet iron of 1.5mm thick.	Steel tape
	2. Cutting of angle iron into measured length.	Hacksaw
	3. Welding of cut angle iron into a frame structure	Arc Welding
	4. Drilling of bolts and nut holes (17mm)	Drilling machine

Table 2: Standard components used

Name	Description
Water Valve	A 2 inches water gate valve to regulate water flow from the tank
Bolts $ Nuts	17mm diameter bolts and nuts used for joining parts together in the machine.
Three Heating Elements	Concentric conductors.
Fibre glass Insulator	1Kg

4.3 Cost analysis

The cost of producing the Locust bean Boiler is grouped into three. They are:-

1. Material Cost.
2. Labour Cost.
3. Overhead Cost.

Table 3: Material cost

S/no	Material/Part	Quantity	Unit Price (₦)	Amount (₦)
1.	Galvanized Steel	1200mm / 1200mm	2,000	2,000
2.	Mild Steel	2400mm / 1200mm	3,100	3,100
3.	Heating element	3	600	1,800
4.	Square Pipe	1 Length	800	800
5.	Control Valve	1	3000	3000
6.	Insulator (fiber glass)	1kg	1,500	1,500
7.	Electrical Cable	2.5mm/7Length	80	560
8.	Plug	1	180	180
9.	Indicator	1	150	150
10.	Bolt and Nut	4	40	160
11.	Electrode	10	10	100
	Total			13,350

2. **Labour Cost**.

Labour cost involves the cost of the machining, cutting, welding and painting. It is taken as 25% of the material cost.

Therefore, labour cost = 25/100 X 13,350

= ₦3, 337.5

3. **Overhead Cost**.

This cost includes cost incurred in the course of production such as transportation as well as the consumables. It is taken as 15% of material cost.

Therefore, overhead cost = 15/100 X 14,010

= ₦2, 002.5

4. **Total Cost = 13,350+3,337.5+2,002.5**

= 18,690

4.4 Performance test

Apparatus

The apparatus and material used in carrying out the test are as follows: -

1. Locust bean 33.75kg
2. The machine (boiler) itself
3. 50 litres of water
4. Time piece
5. Weighing scale
6. 25 litres plastic bucket
7. Digital thermometer

Performance test procedure

A digital thermometer was used to determine the temperature changes at 5 minute interval of heated empty cooler filled with 50, 37.5, 25, 12.5, litres of water. The result obtained was tabulated in table 4. Then the boiler was used to cook 33.75kg of locust bean (table 5) and temperature outside the cooker was also determined and tabulated (table 6).

Table 4: Results obtained from performance test.

Time (Minutes)	Control Experiment Empty Boiler (Ambient Air) ^0C	50 Litres of Water ^0C	37.5 Litres of Water ^0C	25 Litres of Water ^0C	12.5 Litres of Water ^0C
0	31.2	32.5	29.6	28.8	30.0
0.5	45.5				
1	61				34.0
1.5	92				
2	107.5			32.9	38.8
2.5	122		32.3		
3	138.9				46.0
3.5	154				
4	169			40.0	48.5
4.5	183.9				
5	200.7	43.0	40.0		56.0
5.5					
6				48.0	62.0
6.5					
7					65.3
7.5			47.6		
8				55.0	72.5
8.5					
9					75.0
9.5					
10		53.0	55.5	61.0	78.9
10.5					
11					85.2
11.5					

12			70.7	90.0
12.5		63.0		
13				98.5
13.5				
14			76.4	99.6
14.5				
15	65.0	69.8		
15.5				
16			85.0	
16.5				
17				
17.5		77.1		
18			92.5	
18.5				
19				
19.5				
20	74.5	100.0	100.0	
20.5				
21				
21.5				
22				
22.5				
23				
23.5				
24				
24.5				
25	85.0			
25.5				
26				
26.5				
27				
27.5				
28				
28.5				
29				
29.5				
30	95.5			
30.5				
31				
31.5				
32				
32.5	98.5			

Table 5: Results obtained from cooked locust bean.

Time (Minutes)	33.75 kg of Lucust Bean ^0C
0.0	30.0
5.0	35.2
10.0	40.3
15.0	44.9
20.0	50.1
25.0	55.0
30.0	60.2
35.0	64.8
40.0	69.9
45.0	75.1
50.0	80.2
55.0	85.2
60.0	90.0

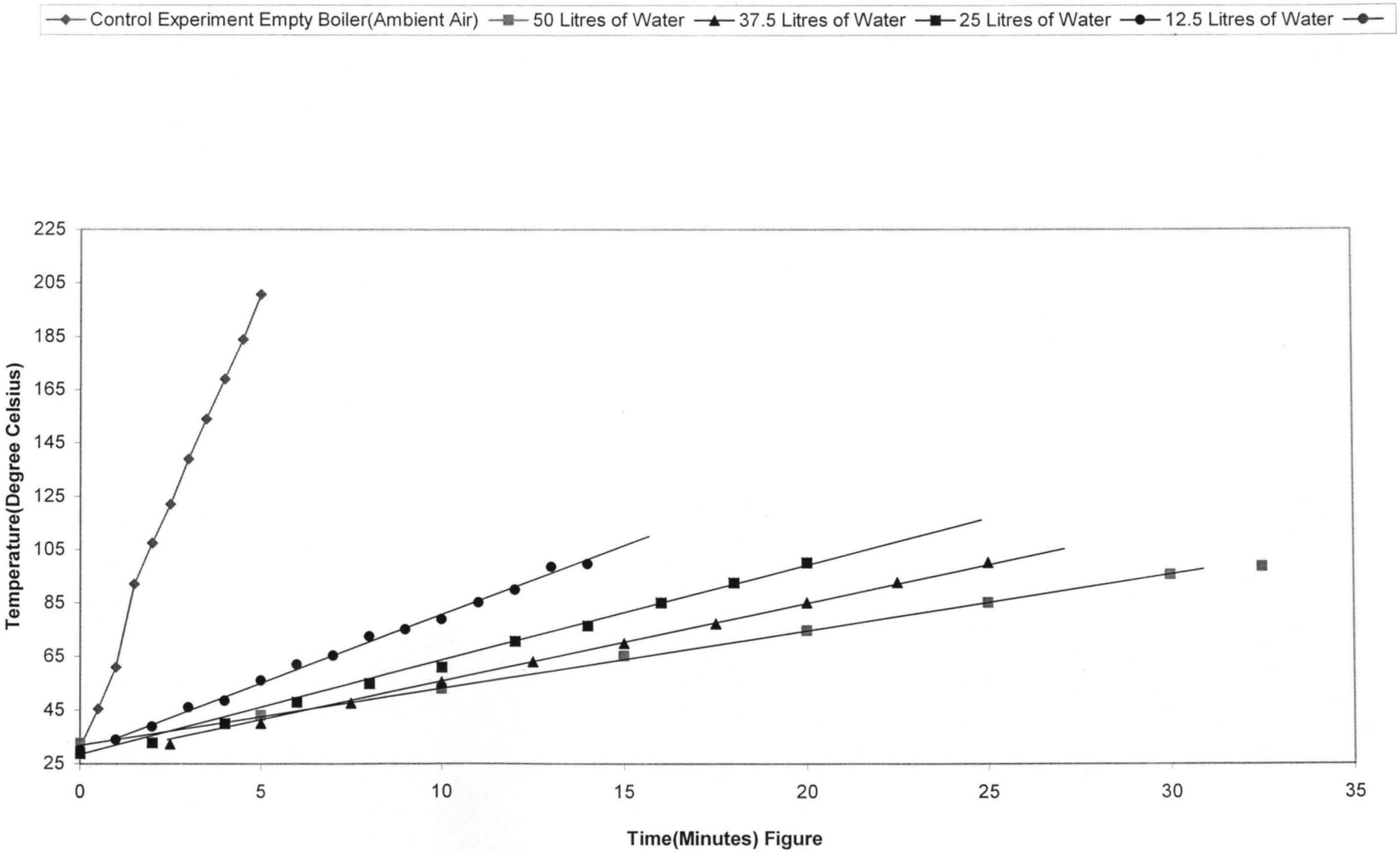
Control Experiment Empty Boiler(Ambient Air)
50 Litres of Water
37.5 Litres of Water
25 Litres of Water
12.5 Litres of Water
Temperature(Degree Celsius)
225
205
185
165
145
125
105
85
65
45
25
0
5
10
15
20
25
30
35
Time(Minutes) Figure

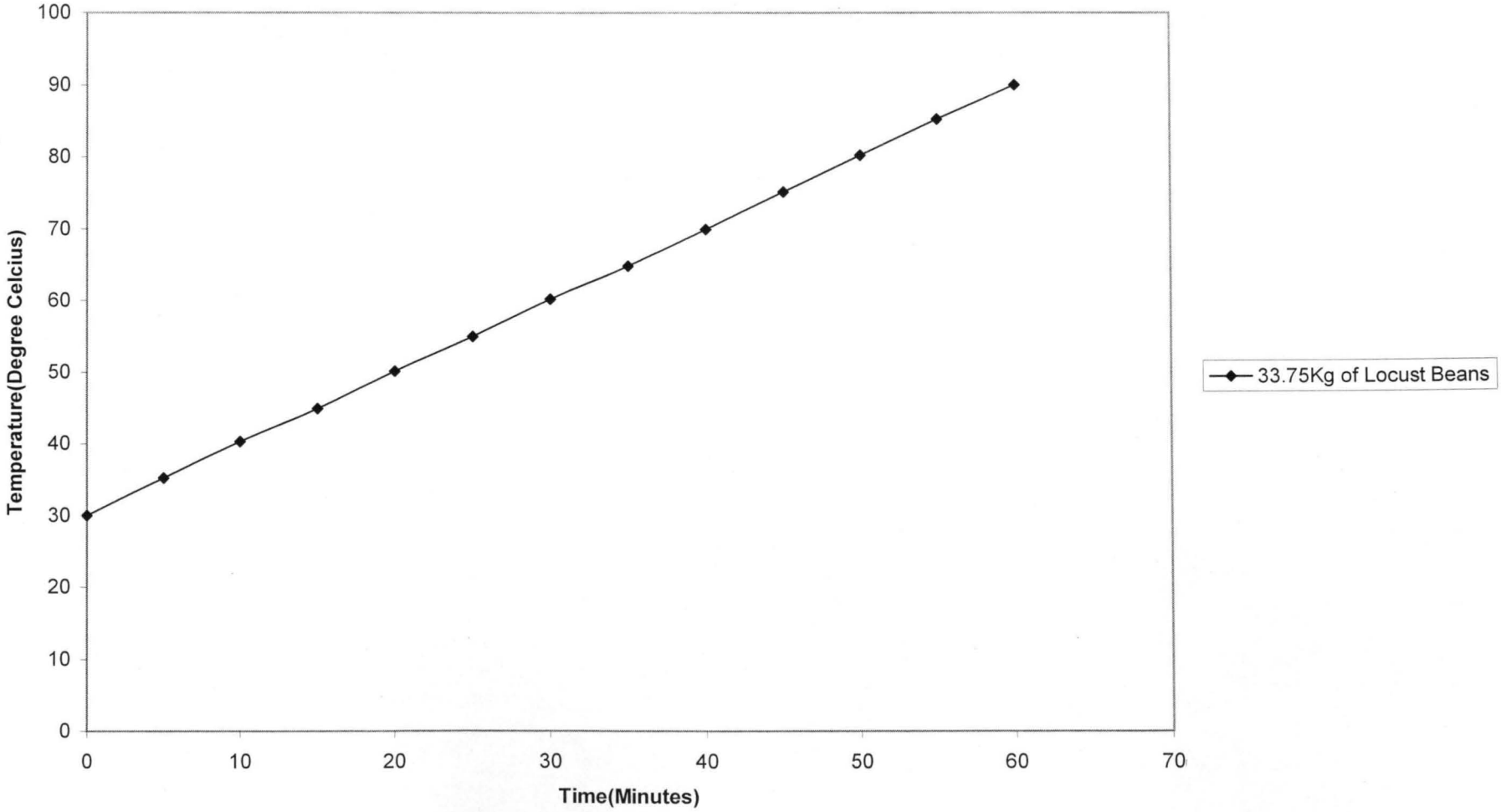
100
90
80
70
60
50
40
30
20
10
0
Temperature(Degree Celcius)
0
10
20
30
40
50
60
70
Time(Minutes)
33.75Kg of Locust Beans

4.5 Operational principle

A boiler is a closed vessel in which water under pressure is transformed into steam by the application of heat. A boiler must be designed to absorb the maximum amount of heat released during combustion. This heat is transferred to the boiled water through radiation, conduction and convention. The relative percentage of each is dependent upon the type of boiler, the designed heat transfer surface. The locust bean cooker was constructed to be operated manually.

The cooked locust bean is to be collected manually after every batch operation through the opening of the gate valve. Operations accommodate minimal hazard. The power required to operate the plant is obtain electrically.

4.6 Results and Discussion

From the result obtained it has been observed that the 33.75Kg of locust bean cooked after 62minutes.

The relationship between the temperature and time is almost linear. There was none or less a proportionate increment on both axes.

The machine worked efficiently, it is also shown that the use of the machine is more efficient than the traditional method of locust bean cooking. The cooker drastically reduced the time for cooking and under hygienic conditions. The cooker was able to attain a temperature of 200.7^0C within 5minutes and it boiled 50litres of water within 32.5minutes. The maximum external temperature recorded in course of the performance evaluation was 68^0C which was rather high.

It can be deduced that as t5he amount of water in the cooker reduced, it took a shorter time to boil.

4.7 Machine maintenance:

Proper care and maintenance of the boiler shell and the heating element to ensure constant supplied of heat and good hygienic condition thus increase its service life. Always use clean water in the process.

Basic maintenance includes checking the electrical component from time to time, and proper washing of boiler shell, and clean the casing.

CHAPTER FIVE

5.0 CONCLUSIONS AND RECOMMENDATIONS

5.1 Conclusions:

The machine was designed and constructed based on the fact that Locust Bean is indigenous to the entire West African sub region.

Moreso, considering that the traditional method of producing the condiment especially while washing and cooking is laborious, time wasting and slow, hence yielding little quantity at a time. The machine was also designed considering the low cost involved and can be affordable to rural community.

The cooker attained 200.7^{0}C within 5 minutes and boiled 50litres of water within 32.5 minutes and it took 62minutes to cook 33.75kg of locust bean, in comparison to traditional method, which takes 7 to 8 hours in cooking the same quantity of locust bean.

Each component of the machine is made from materials readily available in the market. The machine was tested and found to be efficient, easy to maintain and replacement of parts can be done with ease.

5.2 Recommendations:

Owing to technological advancement world over, I advice that, the machine should be improved upon.

I recommend that the improvement should be in the following areas:-

(1) The yellow pulp or slurry should be collected and improved upon instead of wasting it. E.g. Production of juice.

(2) Also the remaining water from cooked bean should be keep and using it in production of gum.

(3) More of such machine should be constructed and made available at affordable cost or inform of loan under a co-operative society.

(4) The machine could be improved upon to be of a continuous flow operation instead of the batch system.

REFERENCES

Campbell, P.G (1980): African Locust Bean (*Parkna Species*) and its West African Fermented Food Product Dawadawa, Ecology Of Food Nutrition -9; 123-132)

Chukwu, O. (2003): Lecture note on Processing, handling and storage of Agricultural Product, Unpublished, Agricultural Engineering Department F.U.T. Minna.

Constrado, (1983): Steel Designer Manual. First Edition. Granada, Pp 875 – 899.

Eugene, A. A. and Theodore B., (1997): Marks' Standard Handbook for Mechanical Engineers, 10th Edition, McGraw Hill, New York, pp 146 – 9 – 160.

Henderson, S. M. and Perry, P. L. (1980): Agricultural Process Engineering 3rd Edition Av. Ub Go. Connection, pp 162 – 165.

Khurmi R. S. and Gupta J. K.. (2004): A Textbook of Machine Design. New Delhi, Eurasia Publishing House.

Intermediate Technology Publication and United Nations' Development Fund for Women (UNIFEM) (1993): Port Crop Processing. Food Cycle Technology Source Books.

Kachru, P. R. (1989): Cleaning and Environmental condition for Effective Seed Storage. Macmillan, pp 34 – 36.

Mayhew, S. and Penny, A. (1988): Tropical and Subtropical Foods. Macmillan, pp 110 – 114.

Oloso, A.O (1988): Design, fabrication, and Evaluation of a Steamer and dehuller for locust beans. Unpublished Msc: Dissertation Department of Agricultural Engineering, University of Ibadan, Nigeria

Sybil P. Parker, (1993): Encyclopedia of Engineering. McGraw Hill, New York, Pp 485 – 495.

Ukahi, O. O. (2000): Lecture note on Processing of Agricultural Products. Unpublished, Agricultural Engineering Department, Kaduna Polytechnic, Kaduna.

Ryder, G. H. (1969): Strength of Material 3rd Edition in S. I units. Macmillan, pp 71 – 85.

CERTIFICATION

This project entitled Design of a locust bean washer and construction of a locust bean cooker Mohammed, Yemi Sulaiman meets the regulations governing the award of the degree of Bachelor of engineering (B. ENG.) of the Federal University of Technology, Minna, and it is approved for its contribution to scientific knowledge and literary presentation.

Engr. Dr M. G. Yisa

Project supervisor

Date

External Examiner

02/11/2006

Date

Engr. Dr (Mrs.) Z. D. Osunde

Head, Department of Agricultural Engineering.

Date